Cassette Car Radio 22RC465/ 35

22RC465/ 35S

Service
Service
Service

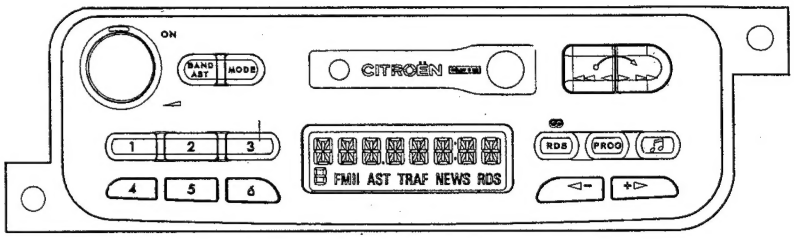

For repair information of the Cassette deck, see Service Manual supplement No 4822 725 25459 of Auto Cassette Deck
LCA5.2 for RC465/35 LCA5.4 for RC465/35S

Service Manual

Contents **page**

12 V

Technical data 2
Controls - Connections ..... 3 - 3a
Security code - Test modes ..... 4 - 4a
Checks and alignment ..... 5 - 5a
CDSP description ..... 6 - 6a
CDSP pinning ..... 7 - 7a
Block diagram ..... 8 - 8a
Front block diagram - Illumination ..... 9 - 9a
Front schematic diagram ..... 10 - 10a
Front PWB layout ..... 11 - 11a
Tuner part schematic diagram ..... 12 - 12a
Power suply part 00 schematic diagram ..... 13 - 13a
Waveforms - Technician's remarks ..... 14 - 14a
Power suply part 01 schematic diagram ..... 15 - 15a
Power suply part 02 schematic diagram ..... 16 - 16a
Connector block schematic diagram ..... 17 - 17a
Power suply part 03 schematic diagram ..... 18 - 18a
Main PWB layout - top side view ..... 19 - 19a
Sound Process part schematic diagram ..... 20 - 20a
Tape part schematic diagram ..... 21 - 21a
Main PWB layout - bottom side view ..... 22 - 22a
Microcontroller part 00 schematic diagram ..... 23 - 23a
Microcontroller part 02 schematic diagram ..... 24 - 24a
Power amplifier part schematic diagram (/35) ..... 25 - 25a
Power amplifier part schematic diagram (/35S) ..... 26 - 26a
Exploded view - Mechanical partslist ..... 27 - 27a
Electrical partslist ..... 28 to 30

Published by Philips Car Systems Printed in the Netherlands

© Copyright reserved

Subject to modification

4822 725 25853

PCS 88 681

PHILIPS

TECHNICAL DATA

GENERAL

Power supply	:10 to 16V DC
Dimensions	:180x160x51 mm
Front	: Integrated
Security code	: Yes
On/Off logic	: Yes
CD changer control	: Yes for /35S
Blinking LED	: Yes
Quiescent current (at 13.5V)	: <1.5mA + 1mA (blinking)

RADIO

LW	: 144-288 KHz - steps Manual : 1 KHz
MW (Europe)	: 531-1602 KHz - steps Manual / Search : 1 / 9 KHz
FM (x3)	: 87.5-108 MHz - steps Manual / Search : 50 / 50 KHz
IF-AM (1/2)	: 10.7 MHz / 450 KHz
IF-FM (1/2)	: 72.2 MHz / 10.7 MHz
Sensivity 26dB S/N	: 40 µV (LW) (limit)
	: 50 µV (MW) (limit)
	: 3.5 µV (FM) (limit)
Limitation α-3dB	: 7 3 µV

AMPLIFIER

Output power	: RC465/35S : 4x19W / 4Ω (THD = 10%)
	: RC465/35 : 4X7W / 4Ω (THD = 10%)
Treble control	: +10 / -10dB 2 at 10kHz
Bass control	: +13/-10dB 2 at 80Hz
Balance control	: 60dB
Fader	: 60dB

CASSETTE

LCA5.2 for RC465/35
LCA5.4 for RC465/35S

Number of tracks	: 2x2
Tape speed	: 4.76 cm/sec
Wow and flutter	: < 0.25%
Crosstalk	: > 30dB

ESD

WARNING

All ICs and many other semi-conductors are susceptible to electrostatic discharges (ESD). Careless handling during repair can reduce life drastically.
When repairing, make sure that you are connected with the same potential as the mass of the set via a wrist wrap with resistance. Keep components and tools also at this potential.

ESD equipment available in Service:

Anti-static table mat large 100X650X1.25mm	4822 466 10953
small 600X650X1.25mm	4822 466 10958
Connection box (1Mohm)	4822 395 10223
Extendible cable (to connect wrist band to connection box)	4822 320 11307
Connecting cable (to connect table mat to connection box)	4822 320 11305
Earth cable (to connect any product to mat or box)	4822 320 11308
Complete kit ESD3 (combining all above products)	4822 310 10671
wristband tester	4822 344 13999

22RC948/00

PCS 88 682

Front controls

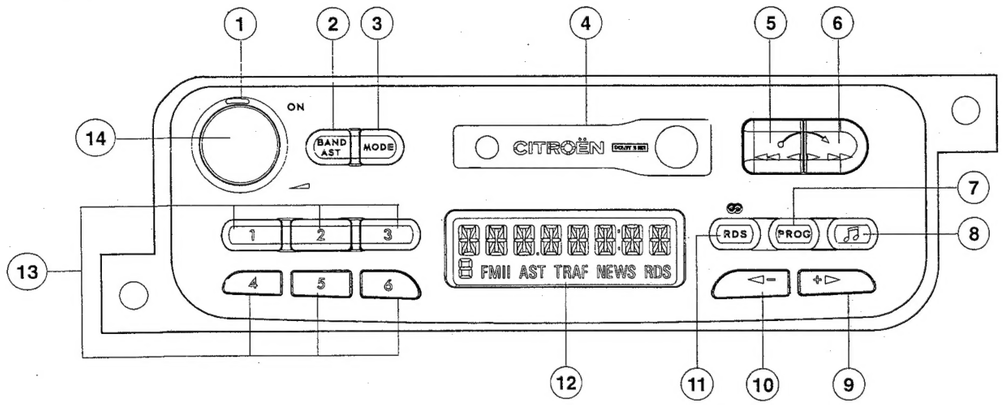

1	Blinking led / pilot light
2	Button band / autostore
3	Button mode cassette / radio / CD*
4	Cassette opening
5	Button FRW
6	Button FFW
5+6	Eject cassette / reverse cassette
7	Button menu program
8	Button menu radio
9	Search up / menu up / track up*
10	Search down / menu down / track down*
11	Button menu RDS
12	Display
13	Preset 1 2 3 4 5 6 / disk* 1 2 3 4 5 6
14	On / off / volume

* : RC465/35S only

Remote control

This set can be also controlled by a remote control, allowing you to carrt out some of the main functions of the set. This remote control is integrated in the driving wheel of the car, for that reason you cannot get one.
If you want to perform some tests using the remote control, you must build it up yourself, using the following schematic diagram:

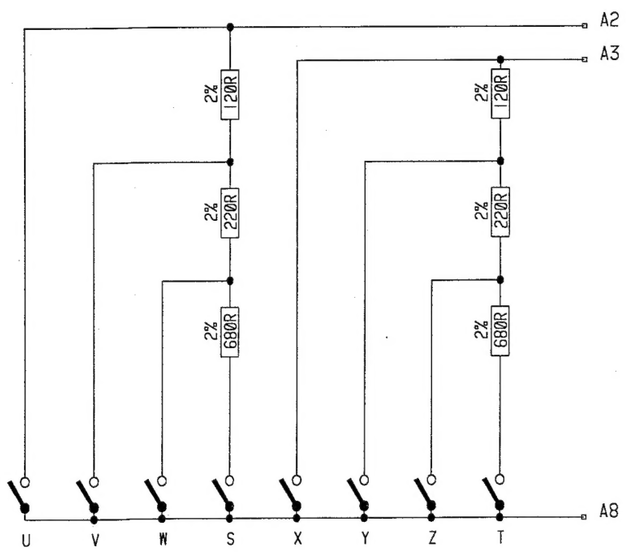

Controls:

U - direct to A2 = ◁—

V - 120Ω to A2 = ⊹▷

W - 340Ω to A2 = Memo +

S - 1020Ω to A2 = Memo -

X - direct to A3 = Mode

Y - 120Ω to A3 = Volume -

Z - 340Ω to A3 = Volume +

T - 1020Ω to A3 = Mute

PCS 88 683

Connections

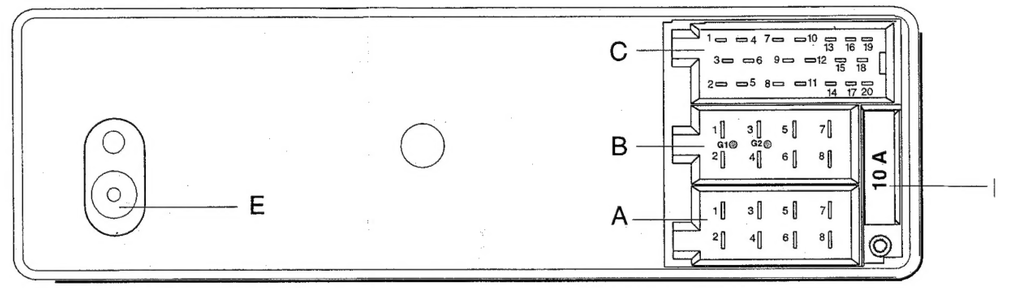

A : Power supply and remote control

A1	Telephone mute
A2	Remote Control 1
A3	Remote Control 2
A4	Power supply permanent
A5	Power supply (switched outpout internally switched)
A6	Illumination (input)
A7	Ignition key (no power)
A8	Power ground & remote control ground

B : Loudspeaker outputs

B1	Rear right +
B2	Rear right -
B3	Front right +
B4	Front right -
B5	Front left +
B6	Front left -
B7	Rear left +
B8	Rear left -

C : For RC465/35S only: CD changer connections

C1 to C12	NC
C13	Bus CDC+
C14	Bus CDC-
C15	Ground CDC
C16	Permanent Supply (output)
C17	Power supply switched
C18	CD line in reference
C19	CD line in left
C20	CD line in right

E	Aerial plug Slide In
F	Fuse 10A

Check and Alignment

For all measurements, please refer to the manual "General Check & Alignment procedures for Car Systems" 4822 725 25456, unless otherwise stated.

Current and voltage
A7 = Acc and A4 = Power / Perm

1) SET OFF

	Voltage for + Perm supply	Current +Acc ON	Current +Acc OFF	Supply µP pin 14 7513	V_LOW µP pin 34 7513
Acc Supply	A4 = 13.5V	< 1.5mA	< 2.5mA	min 4.5V max 5.2V	min 2V max 5.3V

2) SET ON (A6 not connected)

Reset pin 30	Supply µP pin 14 7513		V_LOW pin 34 7513		5V pin3 L7805 ABV		8.5V pin 3 L4885CV		V EEprom	
max 0.8V	min 4.5	max 5.2	min 2	max 5.3	min 4.8	max 5.2	min 8.2	max 8.8	min 4.5	max 5.2

Reference oscillator frequencies (to be measured via a X10 probe)

device	MSM 6307	83CE560	HEF4521	SAA7701	HEF4528
pin	24 & 25	51 & 52	4 & 6	63 & 64	9
frequency	6 MHz 0.5%	16 MHz 0.5%	4.194304 MHz 20 ppm	36.860 MHz 60 ppm	1 Hz 20%

Checks:
1) FM

FM mute	98 MHz 1mV	output at load resistor R & L = 775 mV = REF
	no signal	output should be < -24 dB (REF - 24 dB)

Demodulated FM level	98 MHz	215 mV 2dB
	Input	MPX Output of IC96 (pin 10)

Limiting point α-3dB	FM 98MHz	1mV 400Hz	6µV	4µV	9µV
	RANGE	INPUT	NOMINAL	MIN	MAX

Search levels	Input	Dx: 8µV < X < 25µV
	98 MHz	Local : 100µV < X < 326µV

2) AM

Demodulated AM level	1053KHz - m=30% - 1KHz	230 mV 2dB
	Input	Audio output of IC96 (pin 19)

Sensivity at 26dB S/N	162/216/252KHz	m = 30%	1000Hz	< 38µV
	603/999/1395KHz			< 30µV

Search levels	Input	Dx: 6µV < X < 31µV
	999KHz	Local : 100µV < X < 562µV

No alignment is needed for the radio part. The tuner module IC96 is pre-aligned in the factory.
Dolby alignment, crosstalk alignment and FM DC level curve learning procedure are performed via a special equipment and software, not yet available in Service.
Some values are stored in the EEprom.
The EEprom available in service will contain mean values, that could affect slightly the performance of the set. It is the only solution until further notice. The service code of this EEprom will be given in a next Service Newsletter.
If you change the tuner module, change also the EEprom.

Deck part
Use test cassette SBC420 4822 397 30071 unless otherwise stated.

Tape speed and flutter: Use 3.15KHz test tone	Supply voltage	Tape speed	Flutter
	10.8 - 15.6 V	4.76cm/s +3/-2%	< 0.3%

Crosstalk : use 1KHz 0dB crosstalk signal	< -30dB at speakers output R & L

DESCRIPTION OF THE CAR DIGITAL SIGNAL PROCESSOR (CDSP) SAA7701

The CDSP chip can perform all the signal functions in front of the power amplifier and behind the AM and FM demodulation and tape input. These functions are: interference absorption, stereo decoding, RDS decoding, weak signal processing (soft-mute, sliding stereo, etc...), Dolby-B tape noise reduction and the audio volume controls (volume, balance, fader, tone, dynamic compression). Some functions have been implemented in hardware and are not freely programmable. Digital audio signals from external sources with I2S format are accepted.There are four independent analog output channels. This enables separate tone and equalisation control for front and rear speakers.
The DSP can contain a basic program which enables already a set with AM/FM reception, sophisticated FM weak signal functions, MSS, Dolby-B tape noise reduction system, CD play with compressor function, separate bass and treble tone control and fader/balance control.

Hardware features

- Bit stream 3rd order Sigma-Delta A/D converters with anti alliasing broadband input filters
- D/A converters with four over sampling and noise shaping
- Digital stereo decoder
- Improved, digital IAC
- RDS processing with optional 16 bit buffer via separate channel (two tuner radio possible)
- Auxiliary analog CD input (CD-walkman, speech, economic CD-changer etc...)
- Two separate full I2S CD and DCC high performance interfaces
- Expandable with additional DSPs for sophisticated features through an I2S gateway
- Audio output short circuit protected
- I2C bus controlled
- Analog tape input
- -40 to +85° C operating temperature range

Software features

- Improved FM weak signal processing with more stereo
- Integrated 19KHz MPX filter and de-emphasis
- Electronic adjustments: FM/AM level, FM channel separation, Dolby level
- Baseband audio processing (treble/bass/balance/fader/volume)
- Dynamic loudness or bass boost
- Stereo 1 or 3 band parametric equaliser
- Automatic leveller (in combination with microprocessor)
- Tape equalisation (DCC analog playback)
- Music Search detection for tape (MSS)
- Pause detection for RDS updates
- Dolby-B tape noise reduction
- (adjustable) dynamic compressor
- CD/DCC De-emphasis processing
- Signal level, noise and multipath detection for RDS (I2C bus command)
- Hidden mute during RDS updates
- Improved AM reception

BLOCK DIAGRAM

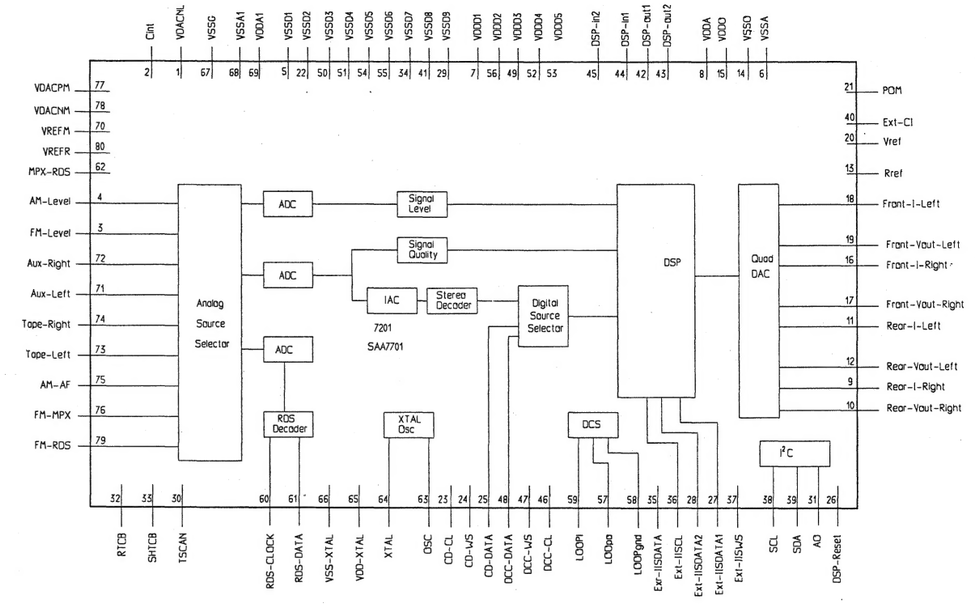

FUNCTIONAL DESCRIPTION

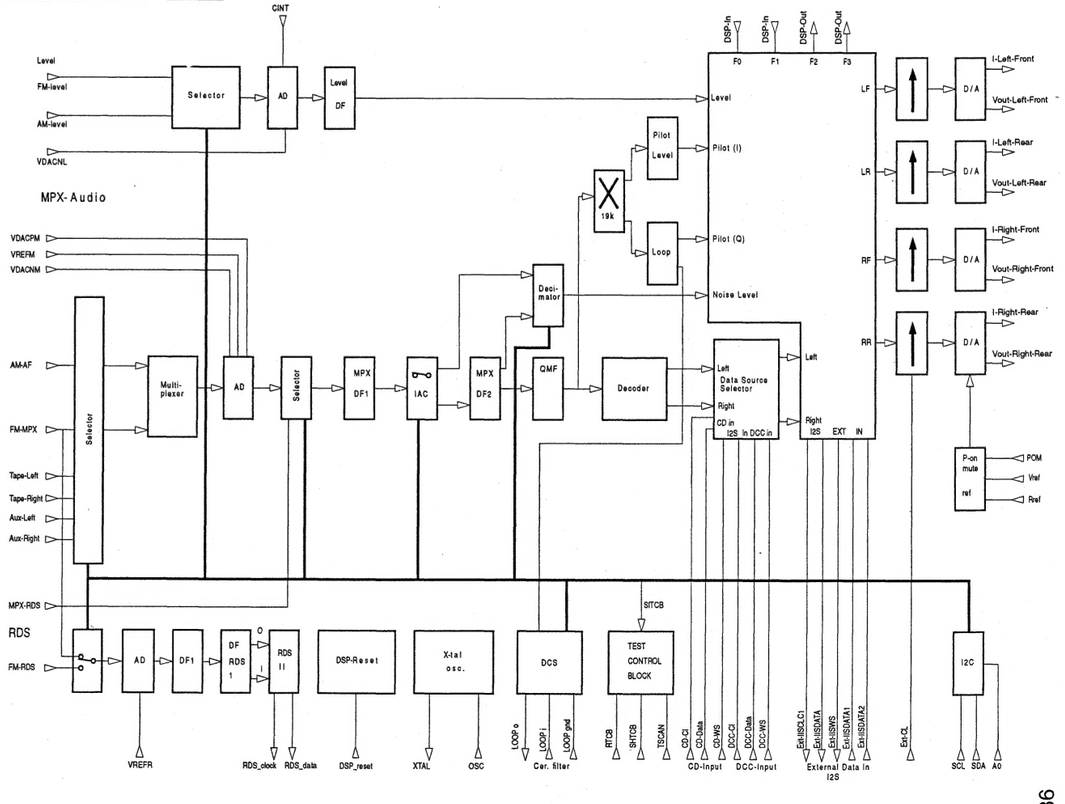

PCS 88 686

.PINNING OF THE CDSP SAA7701

SYMBOL	PIN	DESCRIPTION
VDACNL	1	Ground Reference Level AD DAC LEVEL
CINT	2	Level AD switch mode integrator connection
FM-level	3	FM-level input pin. Via this pin the level of the received FM-radio signal is fed to the CDSP. The level information is needed for a correct functioning of the weak signal behaviour.
AM-level	4	AM-level input pin. Via this pin the level of the received AM-radio signal is fed to the CDSP.
VSSD1	5	Supply ground 1 digital circuitry DACs
VSSA	6	Supply ground analog circuitry DACs
VDDD1	7	Positive supply 1 digital circuitry DACs
VDDA	8	Positive supply analog circuitry DACs
Rear-I-Right	9	Analog audio current output for Rear-right speaker
Rear-Vout-Right	10	Analog audio voltage output for Rear-right speaker
Rear-I-Left	11	Analog audio current output for Rear-left speaker
Rear-Vout-Left	12	Analog audio voltage output for Rear-left speaker
Rref	13	Input for the internal reference current source of the D/A converter
VSSO	14	Supply ground for output Op-amps DAC
VDD0	15	Positive supply for output Op-amps DAC
Front-I-Right	16	Analog audio current output for Front-right speaker
Front-Vout-Right	17	Analog audio voltage output for Front-right speaker
Front-I-Left	18	Analog audio current output for Front-left speaker
Front-Vout-left	19	Analog audio voltage output for Front-left speaker
Vref	20	Voltage input for the internal reference buffer amplifier of the D/A converter.
POM	21	Activates the Power On Mute. Timing is determined with an external capacitor.
VSSD2	22	Ground supply 2 digital circuitry
CD-CI	23	I^2S Clock input CD digital audio source. Also reference for 4* asf and asf. Selected if DIV-EXT/INT is not set. / Output LIRS scan chain 6
CD-WS	24	I^2S Word Select Input CD digital audio source / Input LIRS scan chain 6
CD-Data	25	I^2S Left/Right Data Input CD digital audio source / Input LIRS scan chain 1
DSP-reset	26	Input to reset DSP-core (active low) / input LIRS scan chain 3
Ext_IISDATA1	27	I^2S External Input Data channel 1 (front) from extra DSP chip / input CORE scan chain DIO
Ext_IISDATA2	28	I^2S External Input Data channel 2 (rear) for extra DSP chip
VSSD9	29	Ground supply 9 digital circuitry
TSCAN	30	Scan control (active high)
A0	31	Slave sub-address I^2C selection / Serial data input test control block (SITCB)
RTCB	32	Asynchronous Reset test control block (active high)
SHTCB	33	Shift clock test control block (active high)
VSSD7	34	Ground supply 7 digital circuitry
Ext_IISDATA	35	I^2S External Output Data for extra DSP chip / output LIRS scan chain 4; controlled by ENA_IIS (bit 13)
Ext_IISCL	36	I^2S External Output Clock for extra DSP chip / output LIRS scan chain 3; controlled by ENA_IIS (bit 13)
Ext_IISWS	37	I^2S External input/output Word select for extra DSP chip / output CORE scan chain DIO; controlled by ENA_IIS (bit 13)
SCL	38	Serial clock input (I^2C bus) / input LIRS scan chain 4
SDA	39	Serial data input/output (I^2C bus)
EXT-CI	40	External reference clock input to generate 4*asf and ASF synchronisation. To be used in case the I^2S clock inputs are not suitable. Selection if DIV-EXT/INT is set / Latch signal DAC data words in analog test mode.
VSSD8	41	Ground supply 8 digital circuitry
DSP_out1	42	Digital output 1 from DSP-core (F2 of status register) / output CORE scan chain (tri-state for Debug board)
DSP_out2	43	Digital output 2 from DSP-core (F3 of status register) / IAC trigger output / output DAC scan chain 1; actived by AGC_TRIG (bit 15)

SYMBOL	PIN	DESCRIPTION
DSP_in1	44	Digital input 1 for DSP-core (F0 of status register) / input LIRS scan chain 2
DSP_in2	45	Digital input 2 for DSP-core (F1 of status register) / input CORE scan chain
DCC-CI	46	I^2S Clock input DCC digital audio source. Also reference for 4*asf and asf. Selected if DIV-EXT/INT is not set. / Input DAC digital scan chain 1 / input DAC analog scan chain LEFT / input external MPX ADC if SEL-EXT/ADC is set.
DCC-WS	47	I^2S Word Select input DCC digital audio source / input DAC digital scan chain 2 / input DAC analog scan chain RIGHT / input external RDS ADC if SEL-EXT/ADC is set.
DCC-Data	48	I^2S Left/RIGHT Data input DCC digital audio source / output LIRS scan chain 5 / input external LEVEL ADC if SEL-EXT/ADC is set.
VDDD3	49	Positive supply 3 digital circuitry
VSSD3	50	Ground supply 3 digital circuitry
VSSD4	51	Ground supply 4 digital circuitry
VDDD4	52	Positive supply 4 digital circuitry
VDDD5	53	Positive supply 5 digital circuitry
VSSD5	54	Ground supply 5 digital circuitry
VSSD6	55	Ground supply 6 digital circuitry
VDDD2	56	Positive supply 2 digital circuitry
LOOPo	57	Unfiltered DCS clock output / output DAC scan chain 2 / LEVEL A/D bitstream output in analog A/D test mode / bit slicer output in slicer test mode
LOOPgnd	58	Ground connection DCS filter
LOOPi	59	Filtered DCS clock input / Bit slicer input in slicer test mode
RDS-Clock	60	Radio Data System bit clock output / output LIRS scan chain 1 / MPX A/D bitstream output in analog AD test mode / RDS external clock input; controlled by SEL-BUF/BUF (bit 7) / X-tal output in slicer test mode.
RDS-Data	61	Radio Data System data output / output LIRS scan chain 2 / RDS A/D bitstream output in analog AD test mode
MPX-RDS	62	Selects in FM-mode between FM-MPX and RDS-MPX input signal to the MPX decimation filter / input LIRS scan chain 5 / input A/D scan chain in analog test mode
OSC	63	Crystal oscillator output: Drive output to 36.860 MHz crystal or forced input in slave mode
XTAL	64	Crystal oscillator input: local crystal oscillator sense
VDD_XTAL	65	Positive supply X-TAL circuitry
VSS_XTAL	66	Ground supply X-TAL circuitry
VSSG	67	Ground guards ADs
VSSA1	68	Ground supply ADs analog
VDDA1	69	Positive supply ADs analog
VREFM	70	Mid ref voltage MPX AD and buffers
Aux-Left	71	Analog input pin for Auxiliary-Left signal
Aux-Right	72	Analog input pin for Auxiliary-Right signal
Tape-Left	73	Analog input pin for Tape-Left signal
Tape-Right	74	Analog input pin for Tape-Right signal
AM-AF	75	Analog input pin for AM audio frequency
FM-MPX	76	Analog input pin for FM-Multiplex signal
VDACPM	77	Positive reference voltage AD DAC MPX and RDS
VDACNM	78	Ground reference voltage AD DAC MPX and RDS
FM-RDS	79	Analog FM-MPX input pin for RDS decoding
VREFR	80	Mid ref voltage RDS AD, LEVEL AD and buffers

Explanation: LIRS is the abbreviation of the level, IAC, RDS and Stereo decoder part.

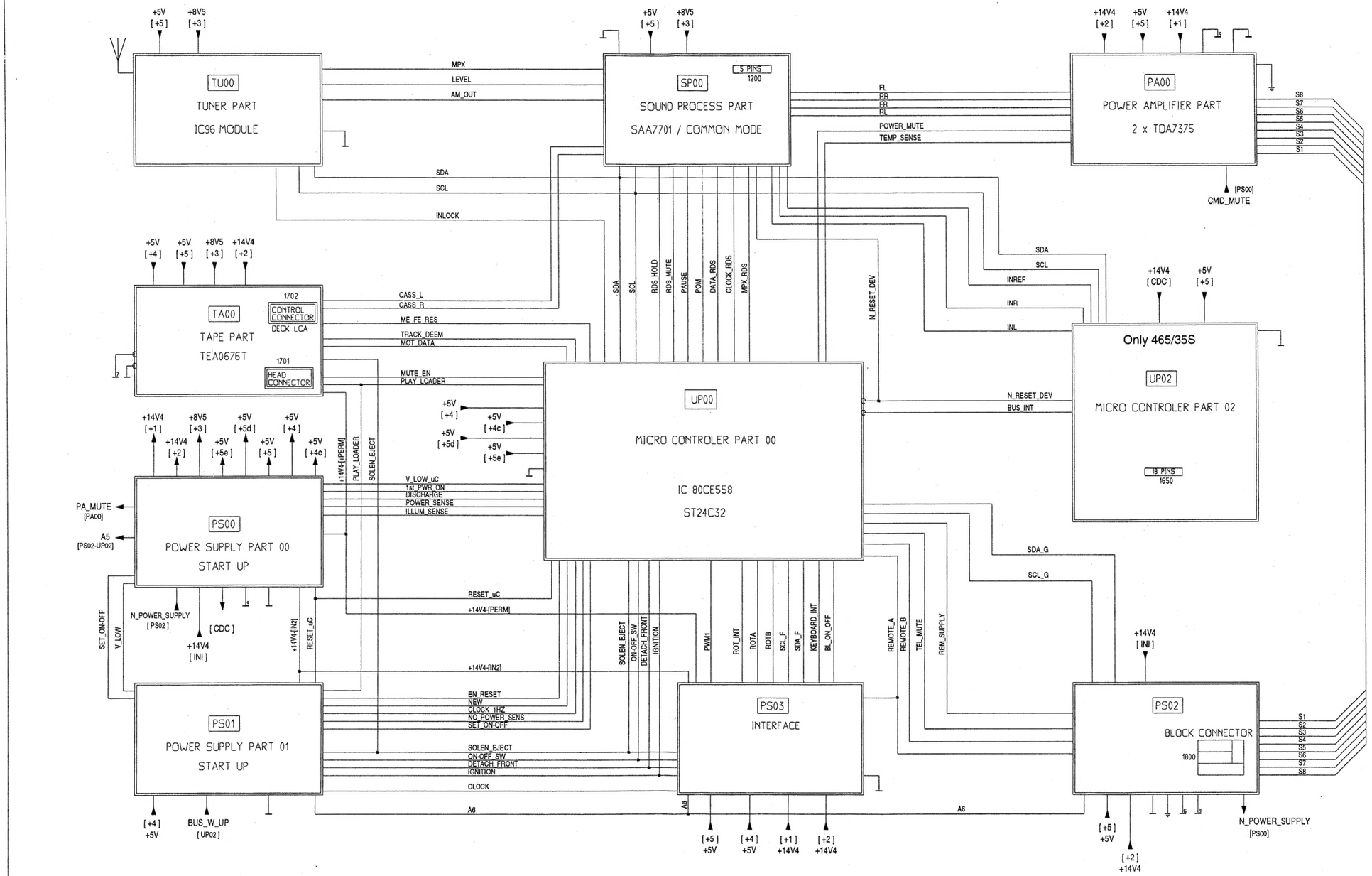

ELECTRICAL BLOC DIAGRAM

22RC465/35
22RC465/35S

Front block diagram

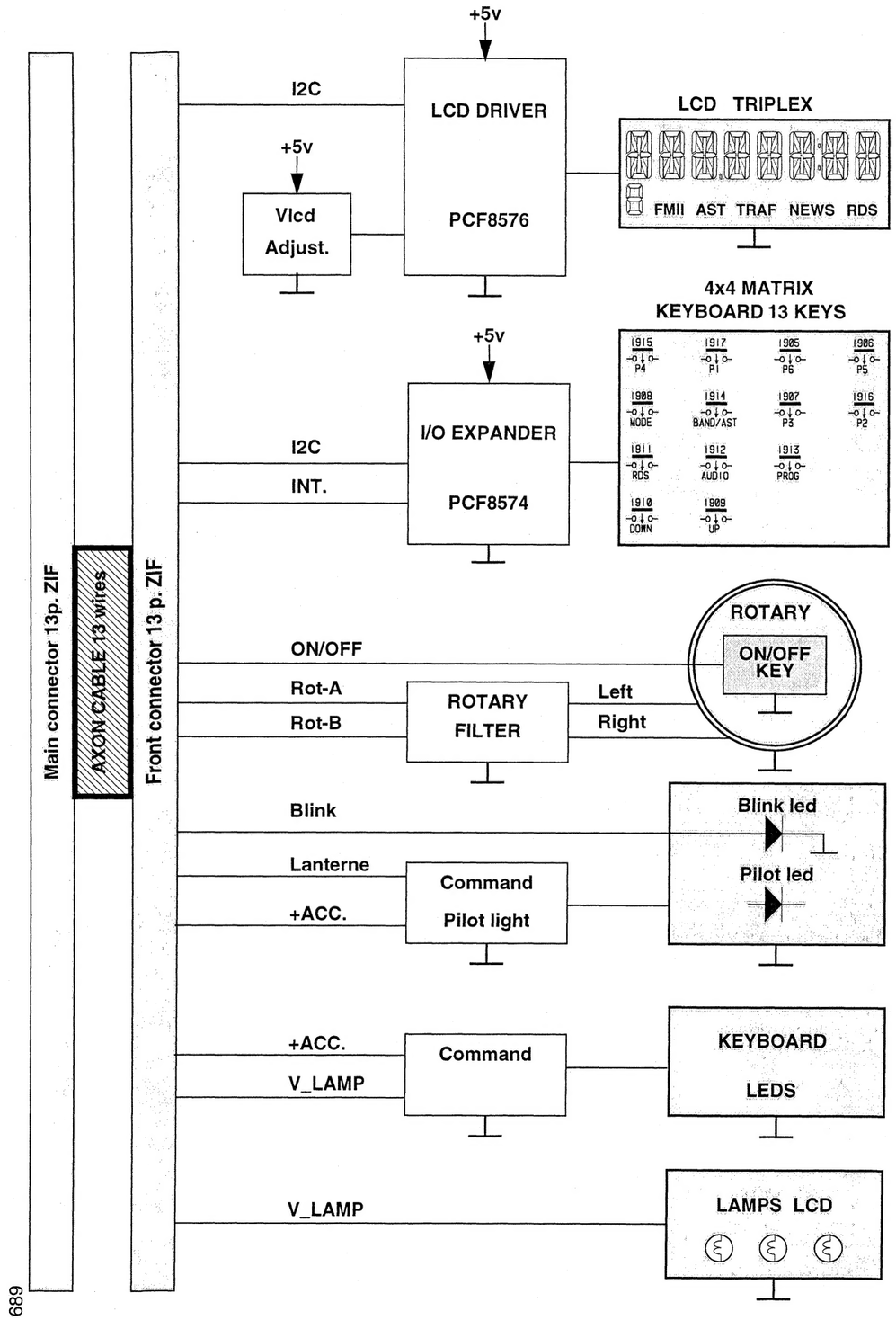

PCS 88 689

Front illumination

		LCD backlighting		Keyboard illumination		Pilot Light		Blinking Led	
IGNITION	**SET**	Day	Night	Day	Night	Day	Night	Day	Night
OFF	**OFF**	OFF	OFF	OFF	OFF	OFF	OFF	**ON**	**ON**
ON	**OFF**	OFF	OFF	OFF	OFF	OFF	**ON**	OFF	OFF
ON	**ON**	OFF	**ON** (Rhéost)	OFF	**ON**	OFF	**ON**	OFF	OFF

LCD tables

LCD 8 Characters			
Driver	Pin Nb	LCD pinning	LCD
BP0	13	1	COM1
BP2	14	2	COM2
BP1	15	3	COM3
BP3	16	--	--

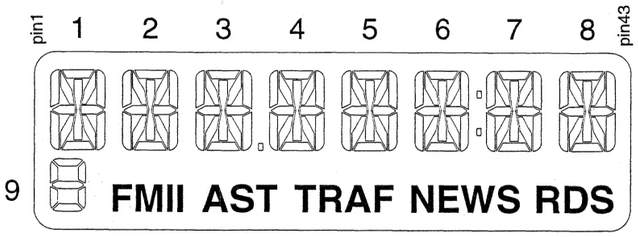

COMMONS

COM1

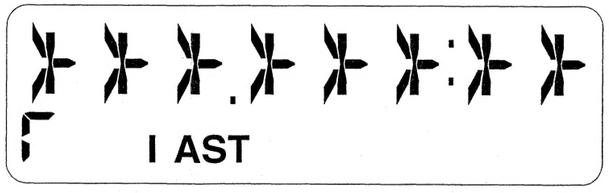

COM3

COM2

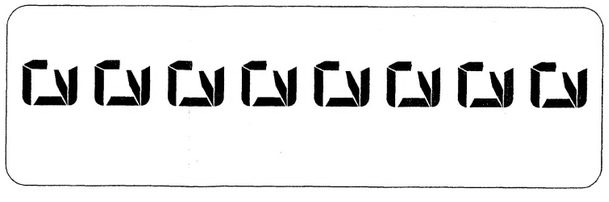

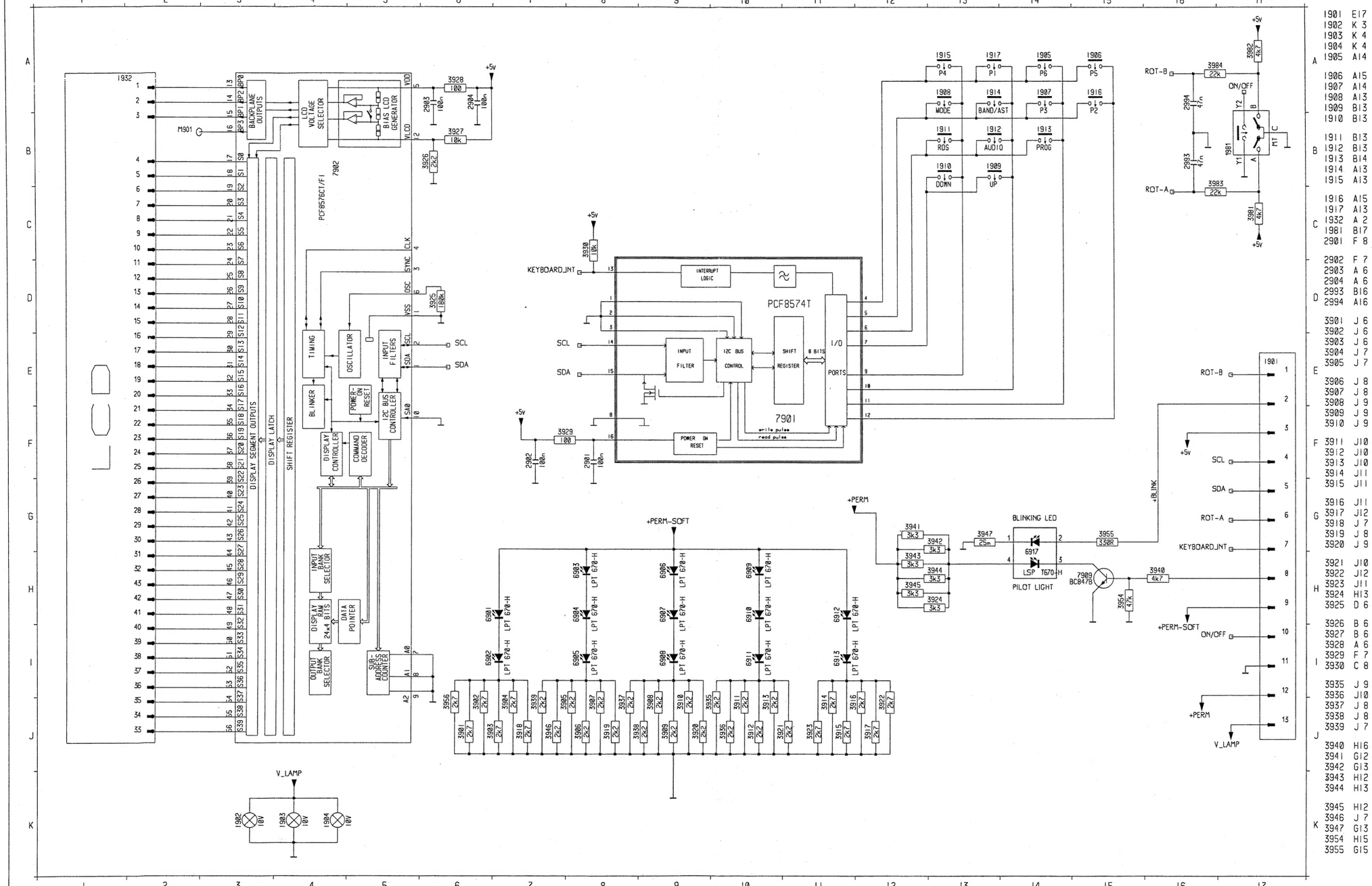

1901	E17	3956	J 6
1902	K 3	3981	C17
1903	K 4	3982	A17
1904	K 4	3983	B16
1905	A14	3984	A16
1906	A15	6901	H 6
1907	A14	6902	I 6
1908	A13	6903	H 8
1909	B13	6904	H 8
1910	B13	6905	I 8
1911	B13	6906	H 9
1912	B13	6907	H 9
1913	B14	6908	I 9
1914	A13	6909	HI0
1915	A13	6910	HI0
1916	A15	6911	I10
1917	A13	6912	HI1
1932	A 2	6913	I11
1981	B17	6917	HI4
2901	F 8	7901	FI0
2902	F 7	7902	B 4
2903	A 6	7909	HI5
2904	A 6		
2993	B16		
2994	A16		
3901	J 6		
3902	J 6		
3903	J 6		
3904	J 7		
3905	J 7		
3906	J 8		
3907	J 8		
3908	J 9		
3909	J 9		
3910	J 9		
3911	J10		
3912	J10		
3913	J10		
3914	J11		
3915	J11		
3916	J11		
3917	J12		
3918	J 7		
3919	J 8		
3920	J 9		
3921	J10		
3922	J12		
3923	J11		
3924	H13		
3925	D 6		
3926	B 6		
3927	B 6		
3928	A 6		
3929	F 7		
3930	C 8		
3935	J 9		
3936	J10		
3937	J 8		
3938	J 8		
3939	J 7		
3940	H16		
3941	G12		
3942	G13		
3943	H12		
3944	H13		
3945	H12		
3946	J 7		
3947	G13		
3954	H15		
3955	G15		

FRONT PWB LAYOUT

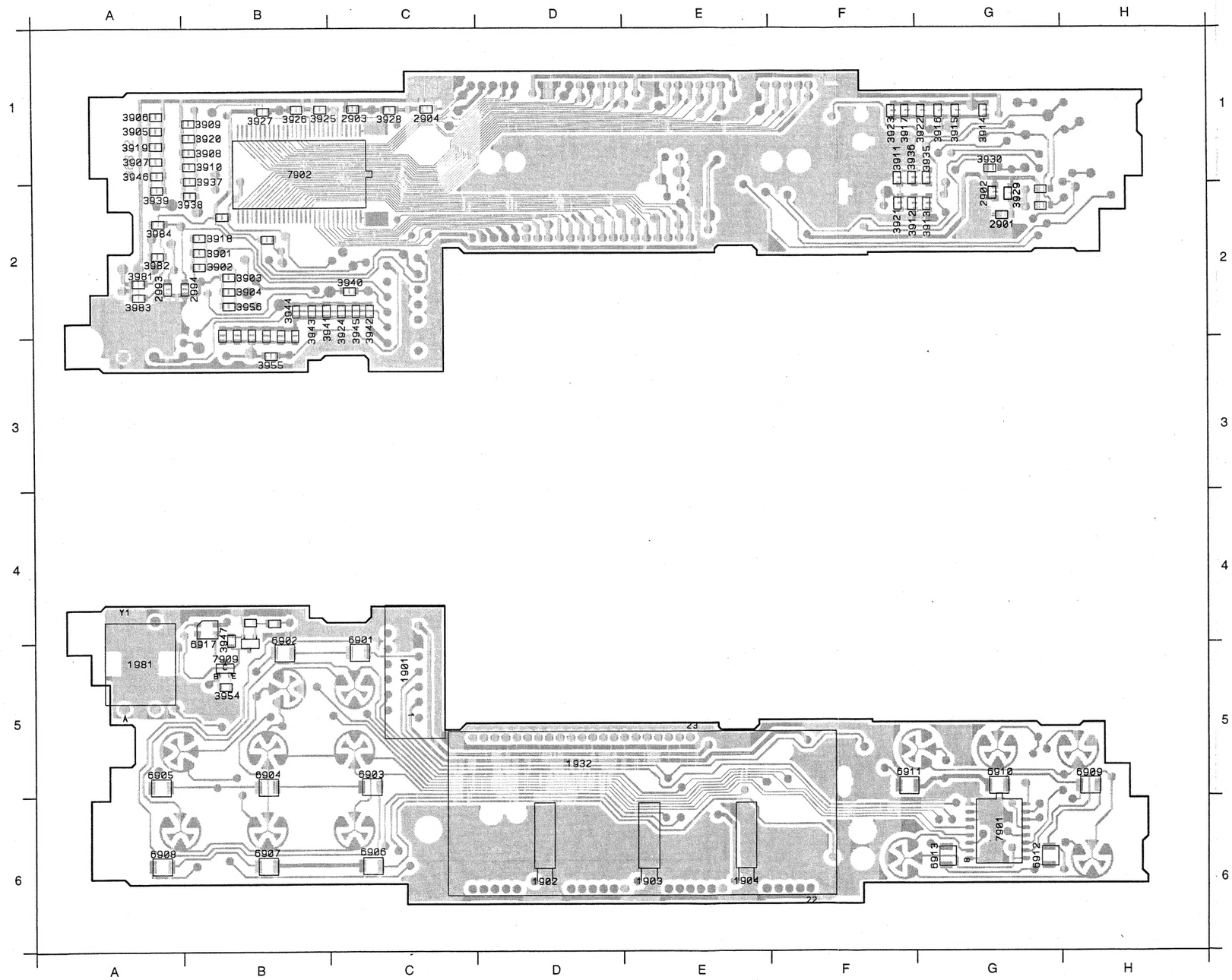

2901	G 2	3920	B 1	3981	A 2	1901	C 5
2902	G 2	3921	F 2	3982	A 2	1902	D 6
2903	C 1	3922	G 1	3983	A 2	1903	E 6
2904	C 1	3923	F 1	3984	A 2	1904	E 6
2993	A 2	3924	C 2	7902	B 1	1932	D 5
2994	B 2	3925	B 1			1981	A 5
3901	B 2	3926	B 1			3947	B 5
3902	B 2	3927	B 1			3954	B 5
3903	B 2	3928	C 1			6901	C 5
3904	B 2	3929	G 2			6902	B 5
3905	A 1	3930	G 1			6903	C 5
3906	A 1	3935	G 1			6904	B 5
3907	A 1	3936	F 1			6905	A 5
3908	B 1	3937	B 1			6906	C 6
3909	B 1	3938	B 2			6907	B 6
3910	B 1	3939	A 2			6908	A 6
3911	F 1	3940	C 2			6909	H 5
3912	F 2	3941	B 2			6910	G 5
3913	G 2	3942	C 2			6911	F 5
3914	G 1	3943	B 2			6912	G 6
3915	G 1	3944	B 2			6913	G 6
3916	G 1	3945	C 2			6917	B 4
3917	F 1	3946	A 1			7901	G 6
3918	B 2	3955	B 3			7909	B 5
3919	A 1	3956	B 2				

22RC465/35
22RC465/35S

IC96 MODULE

Not reparable module. Do not open and do not try to repair yourself!

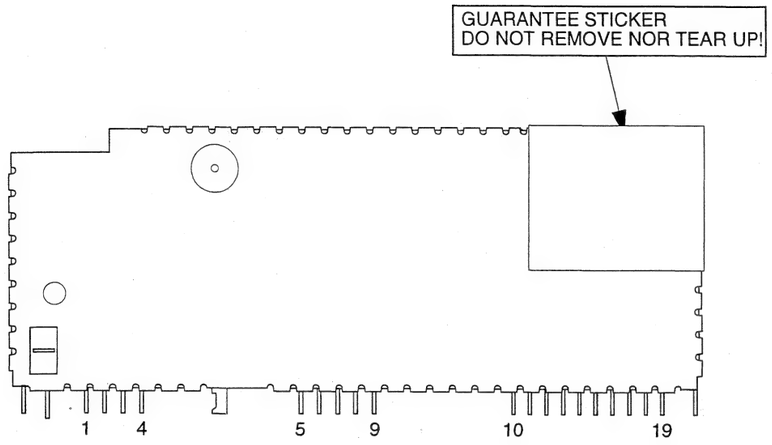

Connections

1	AM/FM Aerial input	10	Multiplex / RDS output signal
2	Ground	11	Unweighted level output
		12	I^2C SDA
5	Inlock detector pin	13	I^2C SCL
6	Vcc 8.5V	14	SDS time constant pin
7	Ground	17	Ground
8	Vcc 5.0V	19	AM audio output
9	V reference		

Quick reference data:

1) AM part
- -Longwave/Mediumwave 144-1710 KHz (inclusive USA)
- -Shortwave 5850-6250 KHz - 49 meter band
- -AM double super concept
- -AM IF1 10.7MHz
- -AM IF2 450KHz
- -First VCO frequency above input signal frequency
- -Second X-tal oscillator frenquency below IF1
- -Usable sensivity α26dB MW = 14μV typ.

1) FM part
- -FM 87.5 - 108MHz
- -FM double super concept
- -FM IF1 72.2MHz
- -FM IF2 10.7MHz
- -First VCO frequency above input signal frequency
- -Second X-tal oscillator frequency below IF1
- -Usable sensivity α26dB =2.5μV typ.
- -THD 1mV δf=75KHz = 0.5% typ
- -Signal to noise ratio = 65dB typ
- -Locktime synthetizer <2mSec

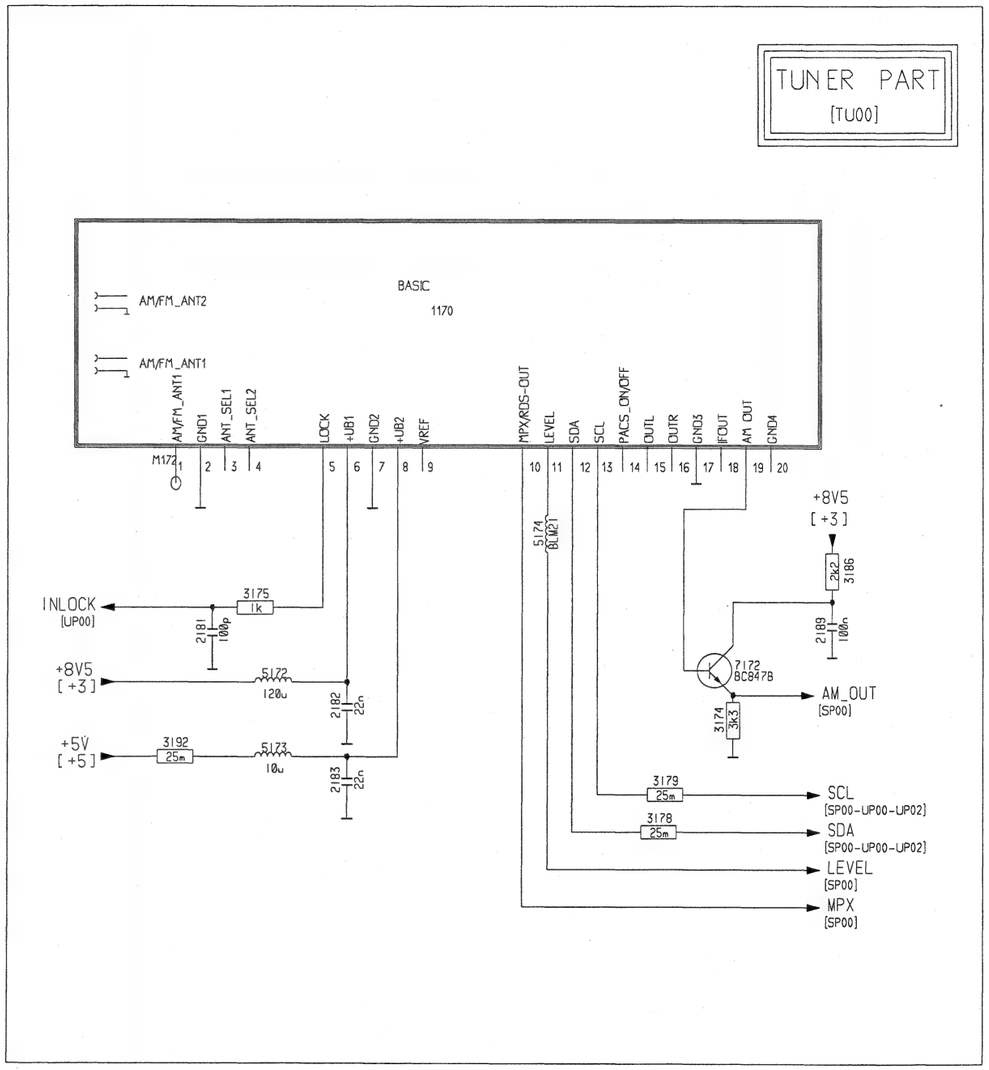

1st_PWR_ON G1
A5 ..... B1
DISCHARGE J5
N_POWER_SUPPLY..... H16
POWER_SENSE C16
P_A_MUTE J16

RESET_uC F1
SET_ON-OFF A16
V_LOW E1
V_LOW_uC F1

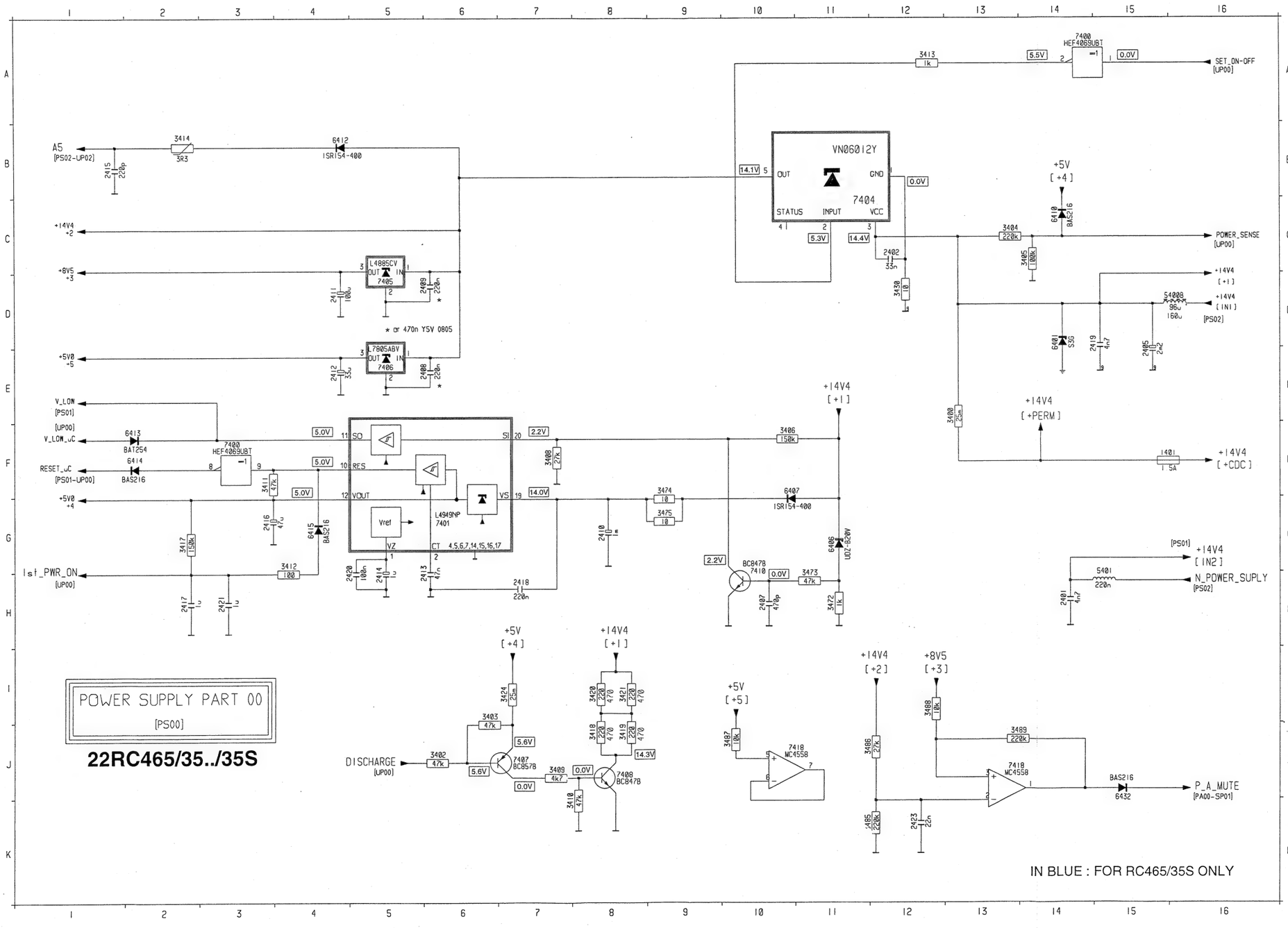

1401	F15
2401	H14
2402	C12
2405	E15
2407	H10
2408	E 6
2409	D 6
2410	G 8
2411	D 4
2412	E 4
2413	H 6
2414	H 5
2415	B 1
2416	G 3
2417	H 2
2418	H 7
2419	DI5
2420	H 5
2421	H 3
2423	K12
3400	E13
3402	J 6
3403	I 6
3404	C13
3405	C14
3406	F10
3408	F 7
3409	J 7
3410	K 7
3411	F 3
3412	G 4
3413	AI2
3414	B 2
3417	G 2
3418	J 8
3419	J 8
3420	I 8
3421	I 8
3424	I 7
3430	DI2
3472	HI1
3473	HI1
3474	F 9
3475	G 9
3485	KI1
3486	JI1
3487	JI0
3488	I12
3489	JI3
5400	DI6
5401	HI5
6401	DI4
6406	GI1
6407	FI0
6410	CI4
6412	B 4
6413	F 2
6414	F 2
6415	G 4
6432	KI5
7400	AI4
7400	F 3
7401	G 6
7404	CI2
7405	D 5
7406	E 5
7407	J 7
7408	J 8
7410	HI0
7418	JI3
7418	JI1

Waveforms on IC 7401 L4949N

1) Set OFF

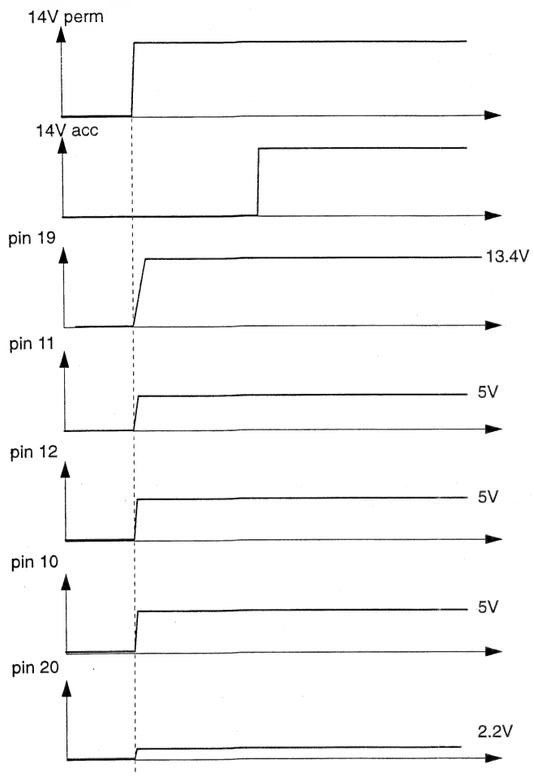

2) Set ON

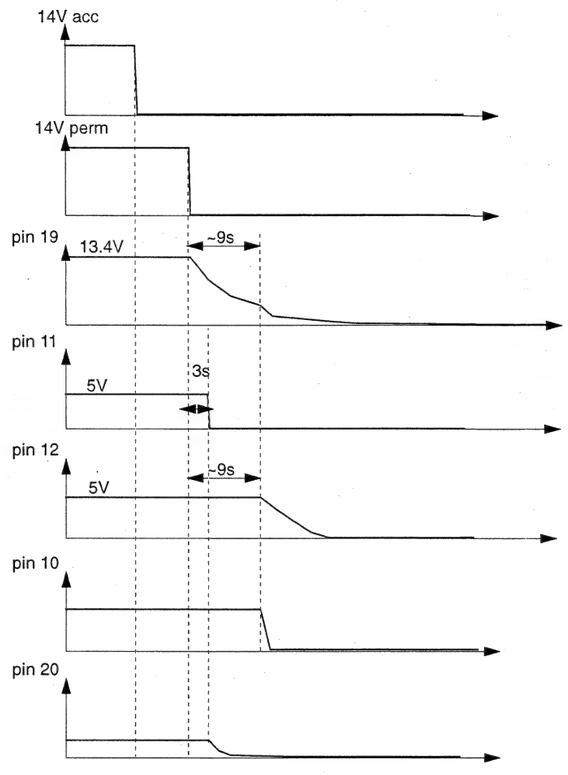

3) V_LOW handling

If a V_LOW occurs during set is On or during set On/Off procedure is performed, the micro p. switches Off the set and finishes the write EEprom activities.After this action the hardware reset generation will be enabled and the micro p. goes to power down.

V_LOW handling

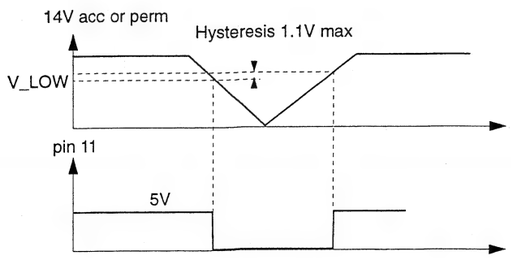

Technician's remarks

A6 ..... C15
CLOCK_1HZ G1
EN_RESET B1
IGNITION E15
ILLUM_SENSE D15
NEW D1

NO_POWER_SENS G15
ON_OFF_SW J15
RESET_uC F1
V_LOW D10

HEF4528BT Dual monostable multivibrator

FUNCTION TABLE

inputs			outputs	
I_0	I1	$\overline{C_D}$	O	$\overline{O}$
⌐	L	H	⌐¬	¬⌐
H	⌐	H	⌐¬	¬⌐
X	X	L	L	H

POWER SUPPLY PART 01
[PS01]

22RC465/35/35S

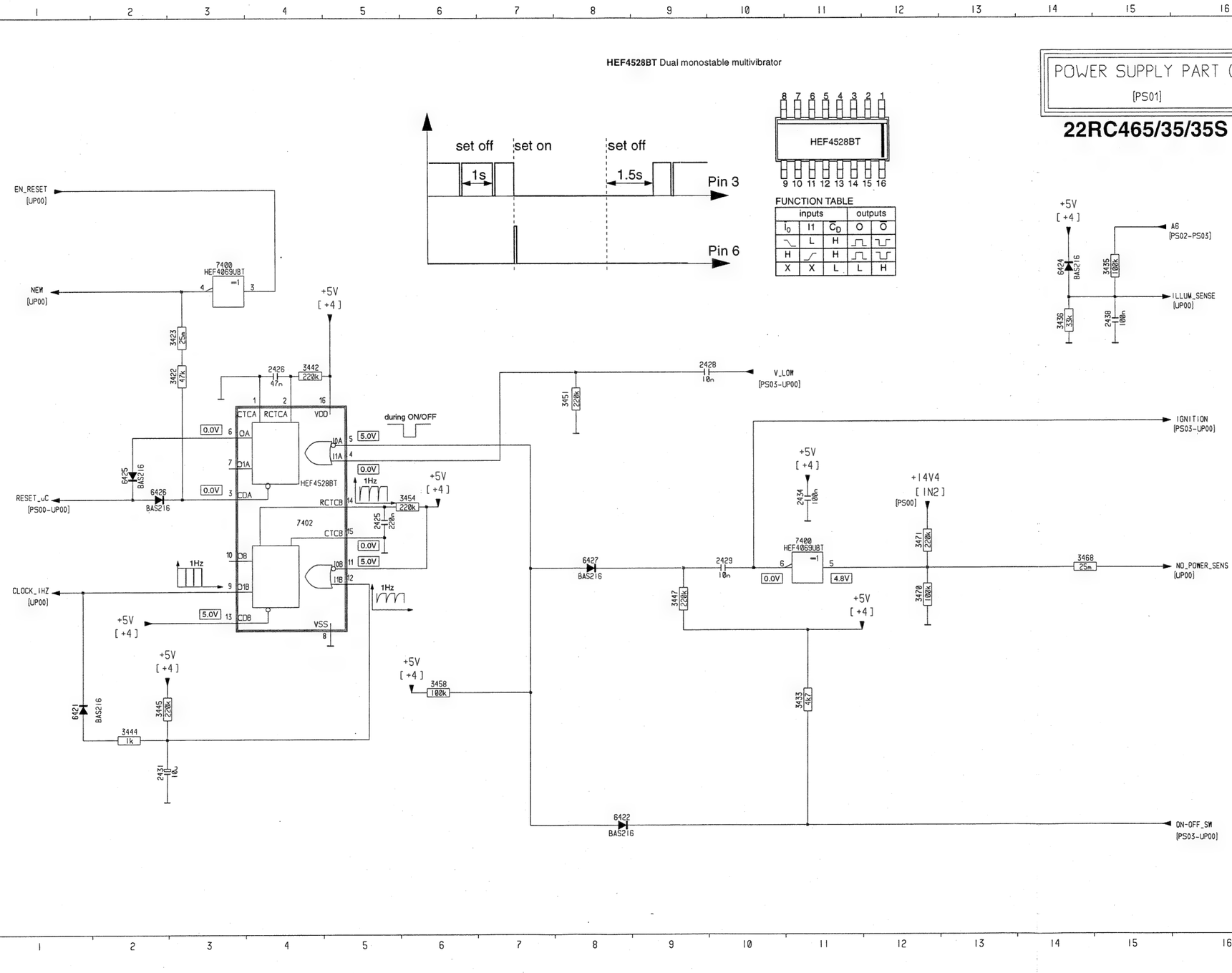

2425 G 5
2426 E 4
2428 D 9
2429 G10
A 2431 J 2
2434 F11
2438 D15
3422 E 3
3423 D 3
3433 I11
3435 C15
B 3436 D14
3442 E 4
3444 I 2
3445 I 2
3447 H 9
3451 D 8
C 3454 F 6
3458 I 6
3468 G14
3470 H12
3471 G12
6421 I 1
D 6422 J 8
6424 C14
6425 F 2
6426 F 2
6427 G 8
7400 C 3
7400 G11
E 7402 G 4

BL_ON-OFF J7
DETACH_FRONT I12
KEYBOARD_INT E13
ON-OFF_SW G10
PWM1 ..... G1
ROTA C10
ROTB B10
ROT_INT B8
SCL_F D13
SDA_F E13
V_LAMP C5/I13
V_LED A5/H13

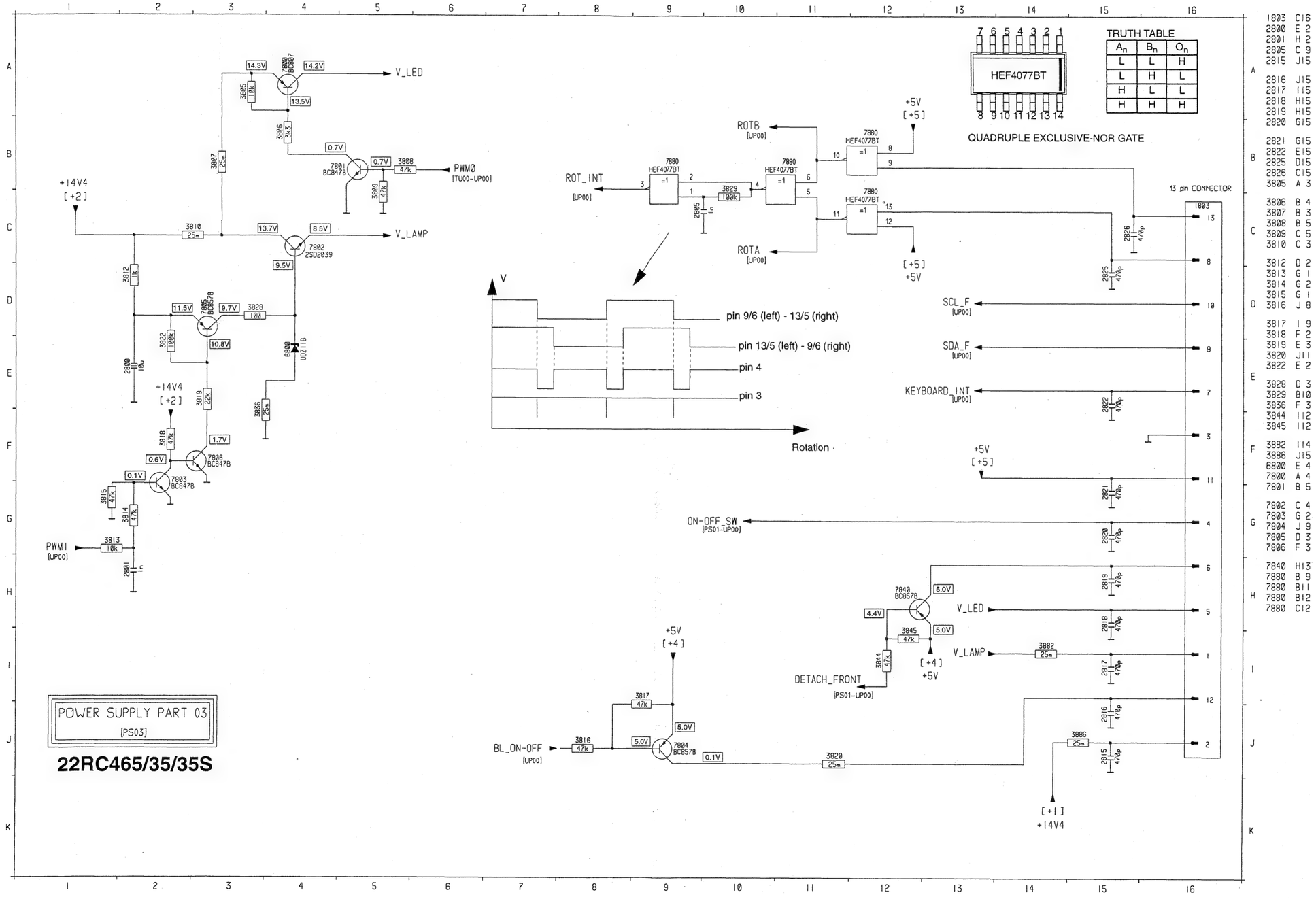

A_n	B_n	O_n
L	L	H
L	H	L
H	L	L
H	H	H

1803 C16
2800 E 2
2801 H 2
2805 C 9
2815 J15
2816 J15
2817 I15
2818 H15
2819 H15
2820 G15
2821 G15
2822 E15
2825 D15
2826 C15
3805 A 3
3806 B 4
3807 B 3
3808 B 5
3809 C 5
3810 C 3
3812 D 2
3813 G 1
3814 G 2
3815 G 1
3816 J 8
3817 I 9
3818 F 2
3819 E 3
3820 J11
3822 E 2
3828 D 3
3829 B10
3836 F 3
3844 I12
3845 I12
3882 I14
3886 J15
6800 E 4
7800 A 4
7801 B 5
7802 C 4
7803 G 2
7804 J 9
7805 D 3
7806 F 3
7840 H13
7880 B 9
7880 B11
7880 B12
7880 C12

MAIN PWB LAYOUT - TOP SIDE VIEW

22RC465/35 ../35S

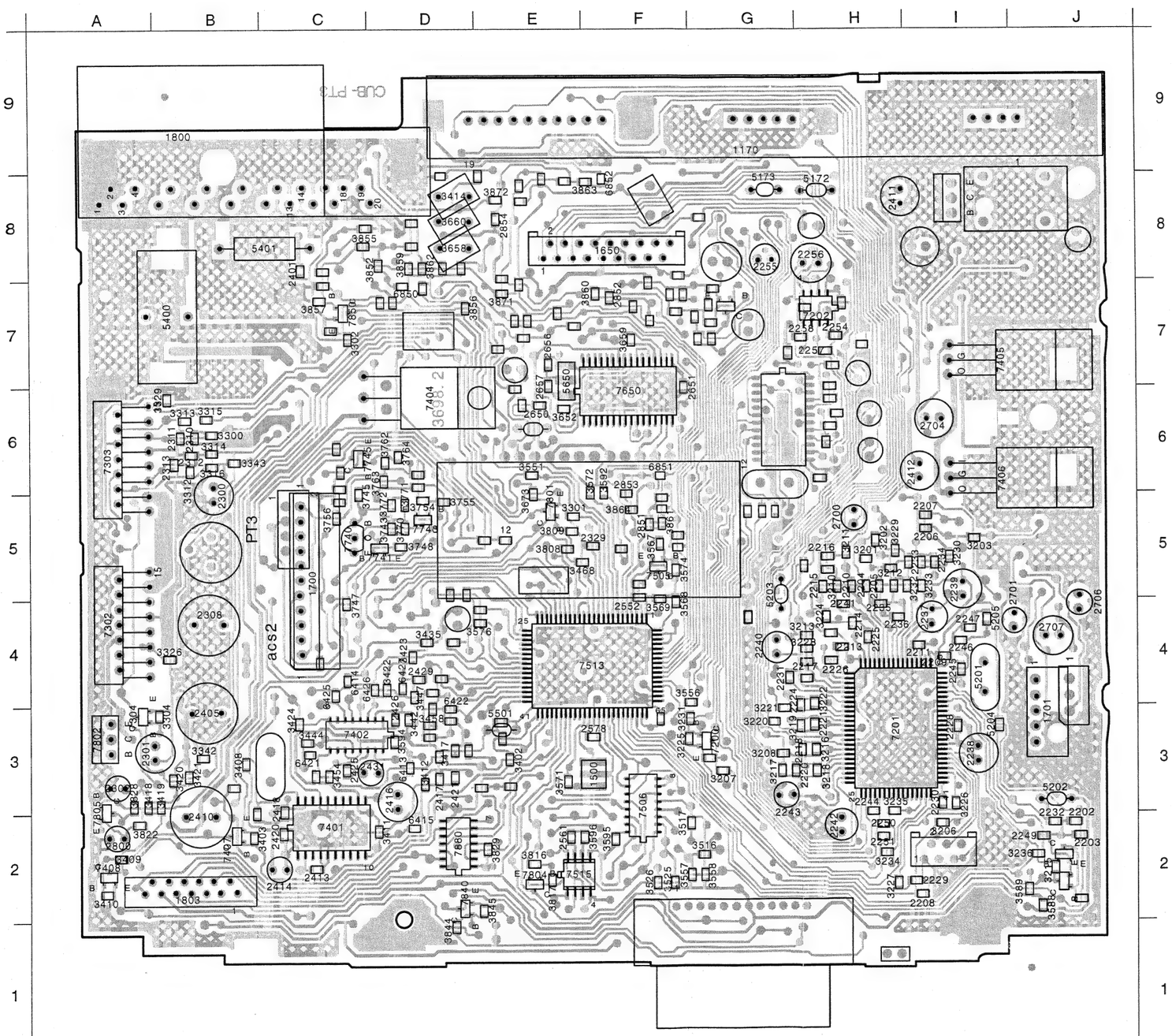

1170	G 8	2425	C 2	3421	B 2	5205	I 4
1500	F 2	2426	D 3	3422	D 3	5400	B 7
1650	F 7	2429	D 3	3423	D 3	5401	C 7
1700	C 4	2431	D 2	3424	C 3	5501	E 3
1701	J 3	2552	F 4	3435	D 3	5650	E 6
1800	B 8	2561	E 2	3442	D 3	6413	D 2
1803	B 1	2578	F 3	3444	C 2	6414	C 3
2202	J 2	2650	E 6	3447	D 3	6415	D 2
2203	J 2	2651	F 6	3454	C 2	6421	C 2
2204	H 4	2656	E 6	3458	D 3	6422	D 3
2205	H 4	2657	E 6	3468	E 4	6425	C 3
2206	I 4	2700	H 5	3516	G 1	6426	D 3
2207	I 5	2701	J 4	3517	F 2	6427	D 3
2208	I 1	2704	I 6	3525	F 1	6850	D 7
2209	I 3	2706	J 4	3526	F 1	6851	F 5
2210	H 4	2707	J 3	3551	E 5	6852	F 8
2211	I 3	2800	A 2	3556	F 3	7200	G 2
2213	H 3	2851	F 5	3557	G 1	7201	H 3
2214	H 4	2852	F 7	3558	G 1	7202	H 7
2215	H 4	2853	F 5	3567	F 4	7302	A 4
2216	H 4	2854	E 7	3568	F 4	7303	A 5
2217	H 3	3201	H 4	3569	F 4	7304	A 3
2218	H 2	3202	H 4	3571	E 2	7401	C 2
2220	G 2	3203	I 4	3572	F 5	7402	C 3
2221	H 3	3206	I 2	3574	F 4	7404	D 6
2224	H 3	3207	G 2	3576	E 4	7405	I 6
2225	H 3	3208	G 2	3588	J 1	7406	I 5
2226	H 3	3210	H 4	3589	J 1	7407	B 2
2228	I 3	3211	H 4	3592	F 5	7408	A 1
2229	I 1	3212	H 4	3594	D 2	7505	F 4
2230	I 2	3213	H 3	3595	F 2	7506	F 2
2231	G 3	3215	J 1	3596	E 2	7513	F 3
2232	J 2	3216	H 2	3652	E 6	7515	E 1
2233	I 4	3217	G 2	3658	D 7	7650	F 6
2234	I 4	3218	H 2	3659	F 6	7740	C 4
2235	H 4	3219	H 3	3660	D 7	7741	D 4
2236	H 4	3220	G 3	3673	E 5	7743	D 5
2237	I 4	3221	G 3	3743	D 4	7745	C 5
2238	I 2	3222	H 3	3745	C 5	7801	E 5
2239	I 4	3224	H 4	3747	C 4	7802	A 3
2240	G 3	3225	F 3	3748	D 4	7804	E 1
2241	H 4	3226	I 2	3754	D 5	7805	A 2
2242	H 2	3227	H 1	3755	D 5	7840	D 1
2243	G 2	3228	H 3	3756	C 5	7850	C 7
2244	H 2	3229	H 4	3762	D 5	7880	D 2
2245	I 3	3230	I 4	3763	D 5		
2246	I 3	3231	F 3	3764	D 5		
2247	I 4	3232	I 4	3770	D 4		
2249	J 2	3233	I 4	3771	D 5		
2250	H 2	3234	H 1	3772	D 5		
2251	H 2	3235	H 2	3808	E 4		
2254	H 6	3236	J 1	3809	E 4		
2255	G 7	3300	B 5	3816	E 1		
2256	H 7	3301	E 5	3817	E 1		
2257	H 6	3302	C 6	3822	A 2		
2258	H 6	3304	B 3	3828	A 2		
2300	B 5	3312	B 5	3829	E 1		
2301	A 2	3313	B 6	3844	D 1		
2302	A 2	3314	B 5	3845	E 1		
2308	B 4	3315	B 6	3852	D 7		
2310	B 5	3316	B 5	3855	C 7		
2311	B 5	3326	B 3	3856	D 7		
2312	B 5	3329	B 6	3857	C 7		
2313	B 5	3342	B 2	3859	D 7		
2329	F 4	3343	B 5	3860	F 7		
2401	C 7	3402	E 2	3861	F 5		
2405	B 3	3403	B 2	3862	D 7		
2410	B 2	3408	B 2	3863	F 8		
2411	H 8	3409	A 1	3864	F 5		
2412	I 5	3410	A 1	3871	E 7		
2413	C 1	3411	D 2	3872	E 8		
2414	C 1	3412	D 2	5172	H 8		
2416	D 2	3414	D 8	5173	G 8		
2417	D 2	3417	D 2	5201	I 3		
2418	C 2	3418	A 2	5202	J 2		
2420	C 2	3419	B 2	5203	G 4		
2421	D 2	3420	B 2	5204	I 3		

AM_OUT G3
CASS_L F2
CASS_R E2
CD_L E2/J6
CD_R D2/J6
CLOCK_RDS J8

DATA_RDS K10
FL D17
FR E17
INL I2
INR K2
INREF J2

LEVEL D2
MPX H4
MPX_RDS C2
N_RESET_DEV I13
PAUSE A12
POM C17

RDS_HOLD A11
RDS_MUTE A11
RL F17
RR F17
SCL I12
SDA I12

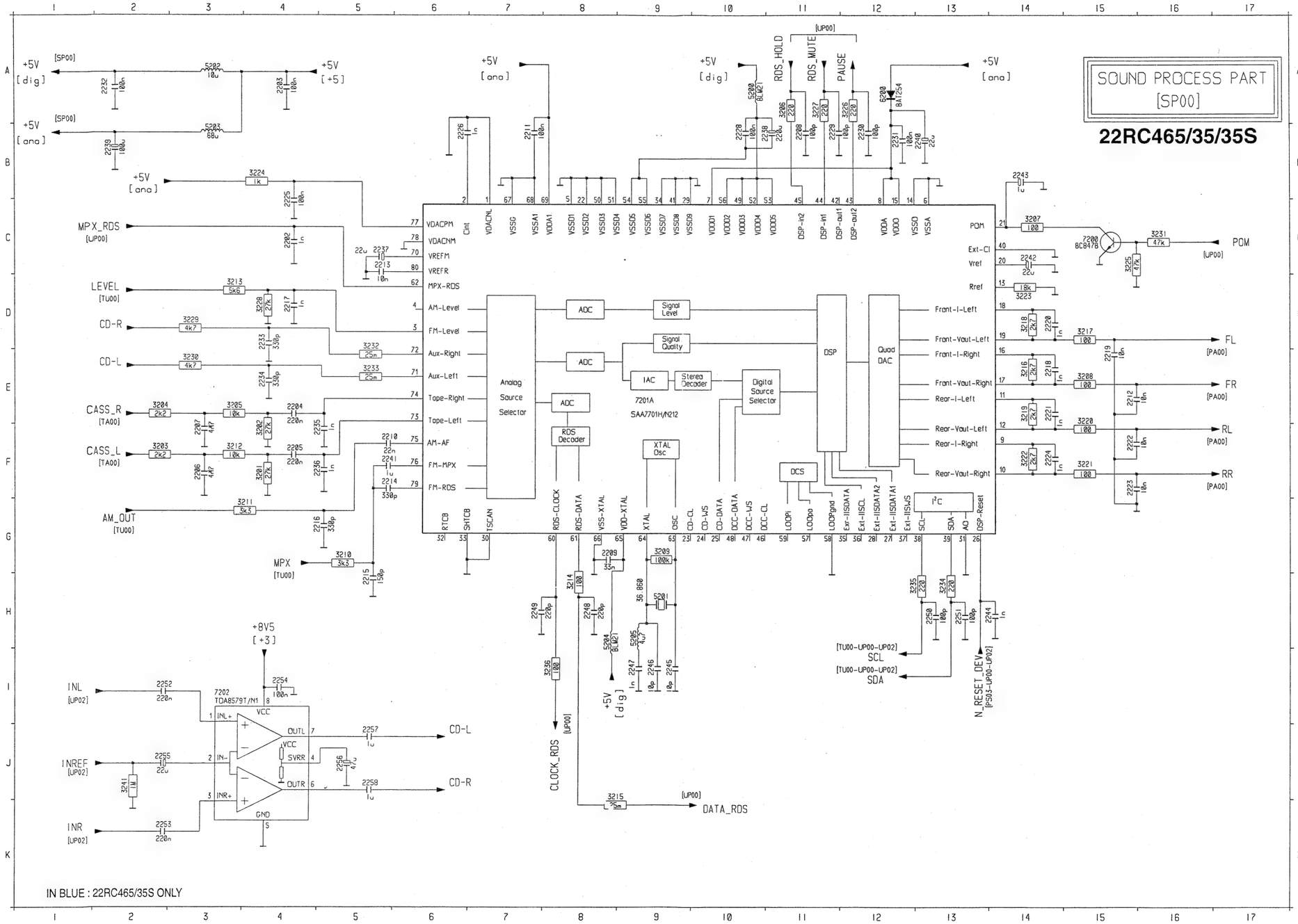

2202	C 4	3215	J 8
2203	A 4	3216	E14
2204	E 4	3217	D15
2205	F 4	3218	D14
2206	F 3	3219	E14
2207	F 3	3220	E15
2208	B11	3221	F15
2209	G 8	3222	F14
2210	F 5	3223	D14
2211	B 7	3224	B 4
2212	E15	3225	C15
2213	C 5	3226	A12
2214	F 5	3227	A11
2215	H 5	3228	D 4
2216	G 5	3229	D 3
2217	D 4	3230	E 3
2218	E14	3231	C16
2219	E15	3232	D 5
2220	D14	3233	E 5
2221	E14	3234	H13
2222	F15	3235	H12
2223	F15	3236	I 8
2224	F14	3241	J 2
2225	C 4	5200	A10
2226	B 6	5201	H 9
2228	B10	5202	A 3
2229	B11	5203	B 3
2230	B12	5204	H 8
2231	B12	5205	H 9
2232	A 2	6200	A12
2233	D 4	7200	C15
2234	E 4	7201	E 9
2235	F 5	7202	I 3
2236	F 5		
2237	C 5		
2238	B11		
2239	B 2		
2240	B13		
2241	F 5		
2242	C14		
2243	B14		
2244	H14		
2245	I 9		
2246	I 9		
2247	I 9		
2248	H 8		
2249	H 7		
2250	H13		
2251	H13		
2252	I 2		
2253	K 2		
2254	I 4		
2255	J 2		
2256	J 5		
2257	J 5		
2258	J 5		
3201	F 4		
3202	F 4		
3203	F 2		
3204	E 2		
3205	E 3		
3206	A11		
3207	C14		
3208	E15		
3209	G 9		
3210	G 5		
3211	G 4		
3212	F 3		
3213	D 3		
3214	H 8		

CASS_L E16
CASS_R A16
ME_FE_RES A14/K7
MUTE_EN I7
PLAY_LOADER G10
MOT_DATA K12

SOLEN_EJECT J7
TRACK_DEEM A8/G7

TAPE PART
[TA00]

22RC465/35/35S

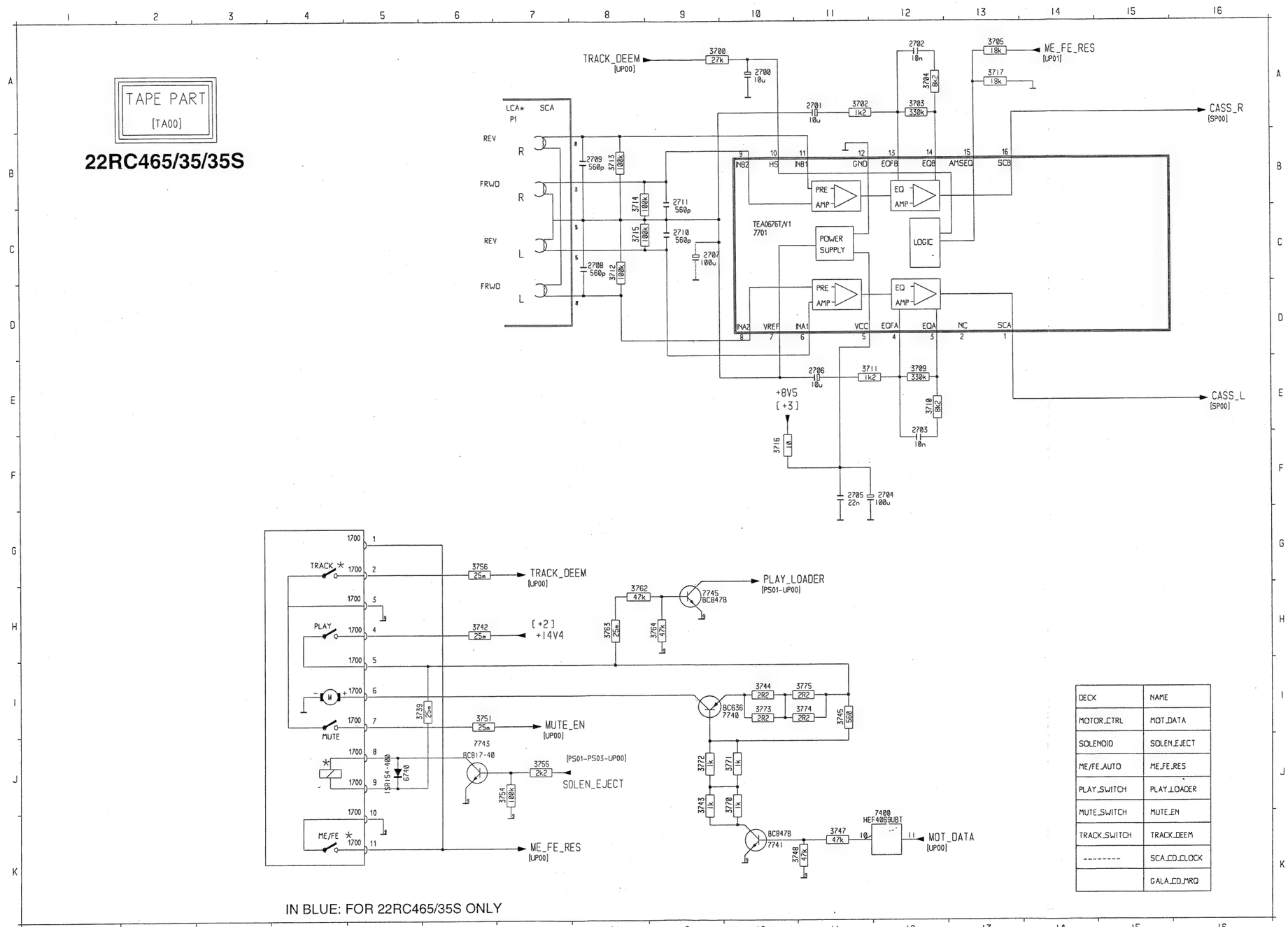

DECK	NAME
MOTOR_CTRL	MOT_DATA
SOLENOID	SOLEN_EJECT
ME/FE_AUTO	ME_FE_RES
PLAY_SWITCH	PLAY_LOADER
MUTE_SWITCH	MUTE_EN
TRACK_SWITCH	TRACK_DEEM
--------	SCA_CD_CLOCK
	GALA_CD_MRQ

IN BLUE: FOR 22RC465/35S ONLY

1700 G 5
1700 G 5
1700 H 5
1700 H 5
1700 I 5
1700 I 5
1700 I 5
1700 J 5
1700 J 5
1700 K 5
1700 K 5
2700 A10
2701 A11
2702 A12
2703 F12
2704 F12
2705 F11
2706 E11
2707 C 9
2708 C 8
2709 B 8
2710 C 9
2711 B 9
3700 A 9
3702 A11
3703 A12
3704 A12
3705 A13
3709 E12
3710 E12
3711 E11
3712 C 8
3713 B 8
3714 B 8
3715 C 8
3716 F10
3717 A13
3739 I 5
3742 H 6
3743 J 9
3744 I10
3745 I11
3747 K11
3748 K10
3751 I 6
3754 J 7
3755 J 7
3756 G 6
3762 H 8
3763 H 8
3764 H 9
3770 J10
3771 J10
3772 J 9
3773 I10
3774 I11
3775 I11
6740 J 5
7400 K12
7701 C10
7740 I10
7741 K10
7743 J 6
7745 H 9

MAIN PWB LAYOUT - BOTTOM SIDE VIEW

22RC465/35../35S

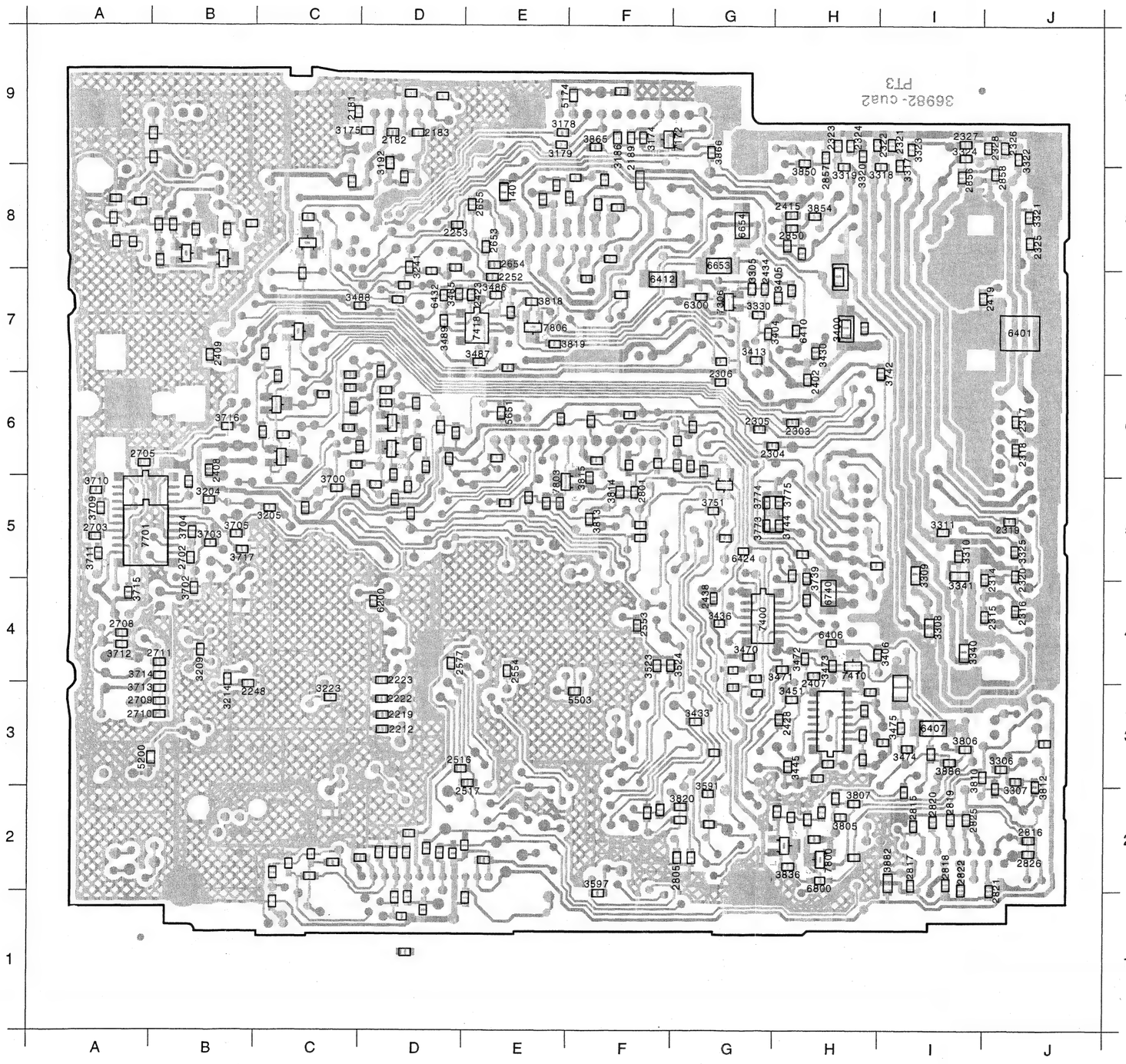

1401 F 8
2181 H 8
2182 G 8
2183 G 8
2189 E 8

2212 G 2
2219 G 3
2222 G 3
2223 G 3
2248 I 3

2252 F 7
2253 G 7
2303 C 5
2304 D 5
2305 D 5

2306 D 6
2314 B 4
2315 B 3
2316 A 4
2317 A 5

2318 A 5
2319 A 4
2320 A 4
2321 B 8
2322 C 8

2323 C 8
2324 C 8
2325 A 7
2326 A 8
2327 B 8

2328 B 8
2402 C 6
2407 C 3
2408 I 5
2409 I 6

2415 C 7
2419 B 7
2423 G 7
2428 D 2
2434 D 7

2438 D 4
2516 G 2
2517 G 2
2553 E 3
2554 F 3

2577 G 3
2653 F 7
2654 F 7
2655 G 7
2702 I 4

2703 J 4
2705 J 5
2708 J 3
2709 J 3
2710 J 3

2711 J 3
2801 E 5
2805 E 1
2815 B 1
2816 A 1

2817 B 1
2818 B 1
2819 B 2
2820 B 1
2821 B 1

2822 B 1
2825 B 2
2826 A 1
2850 C 7
2856 B 8

2857 C 8
2858 B 8
3174 E 8
3175 H 8
3178 F 8

3179 F 8
3186 E 8
3192 G 8
3204 I 5
3205 H 5
3209 I 3
3214 I 3

3223 H 3
3241 G 7
3305 D 7
3306 A 2
3307 A 2

3308 B 3
3309 B 4
3310 B 4
3311 B 4
3317 B 8

3318 C 8
3319 C 8
3320 C 8
3321 A 7
3322 A 8

3323 B 8
3324 B 8
3325 A 4
3330 D 6
3340 B 3

3341 B 4
3400 C 6
3404 D 6
3405 D 7
3406 C 3

3413 D 6
3430 C 6
3433 D 2
3436 D 3
3445 C 2

3451 C 3
3470 D 3
3471 D 3
3472 C 3
3473 C 3

3474 B 2
3475 B 2
3485 G 7
3486 F 7
3487 F 6

3488 H 6
3489 G 6
3523 E 3
3524 E 3
3591 D 2

3597 E 1
3700 H 5
3702 I 4
3703 I 4
3704 I 4

3705 I 4
3709 J 5
3710 J 5
3711 J 4
3712 J 3

3713 J 3
3714 J 3
3715 J 4
3716 I 5
3717 I 4

3739 C 4
3742 C 6
3744 D 4
3751 D 4
3773 D 4

3774 D 5
3775 D 5
3805 C 2
3806 B 2
3807 C 2

3810 B 2
3812 A 2
3813 E 4
3814 E 5
3815 E 5
3818 F 7
3819 F 6

3820 E 2
3836 C 1
3850 C 8
3854 C 7
3865 E 8

3866 D 8
3882 C 1
3886 B 2
4999 G 1
5174 F 8

5200 J 2
5503 F 3
5651 F 5
6200 G 4
6300 D 7

6401 A 6
6406 C 3
6407 B 2
6410 C 6
6412 E 7

6424 D 4
6432 G 7
6653 D 7
6654 D 7
6740 C 4

6800 C 1
7172 E 8
7306 D 7
7400 D 3
7410 C 3

7418 F 6
7701 J 4
7800 C 1
7803 F 5
7806 F 6

1st_PWR_ON G10	DETACH_FRONT I2	ILLUM_SENSE J1	MUTE_EN K10	PLAY_LOADER G1	RDS_MUTE I9	ROT_INT H1	SDA_F B13	TEMP_SENSE J2
BL_ON-OFF I1	DISCHARGE H2	INLOCK J9	NEW D1/E10	POM G9	REMOTE_A K1	SCL C12	SDA_G B13	TRACK_DEEM F10
BUS_INT F1	EN_RESET J10	KEYBOARD_INT H1	NO_POWER_SENS I2	POWER_MUTE G10	REMOTE_B K2	SCL_F C13	SDA_uC D8/A15	V_LOW_uC F2
CLOCK_1HZ H2	I2C_SWITCH1 ..... H9/B17	ME_FE_RES G9	N_RESET_DEV I12	POWER_SENS J1	RESET_uC E9/C17	SCL_G D13	SET_ON-OFF J9	
CLOCK_RDS H9	I2C_SWITCH2 ..... H10/C17	MPX_RDS H9	ON-OFF_SW G2	PWM1 ..... E10	ROTA I1	SCL_uC D8/D15	SOLEN_EJECT G1	
DATA_RDS H10	IGNITION G2	MOT_DATA K9	PAUSE I10	RDS_HOLD I10	ROTB H1	SDA B12	TEL_MUTE J9	

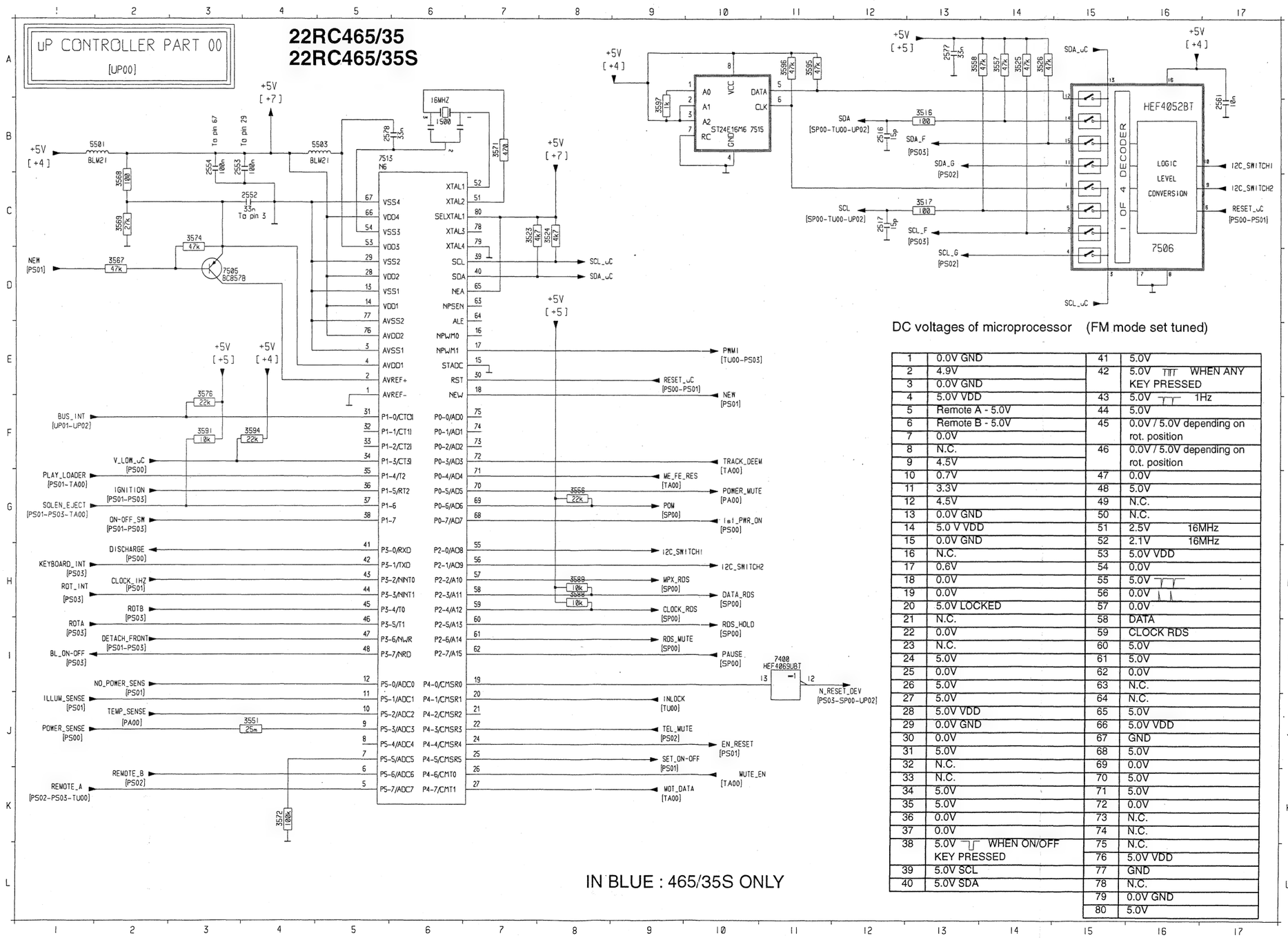

DC voltages of microprocessor (FM mode set tuned)

1	0.0V GND	41	5.0V
2	4.9V	42	5.0V ⊓⊓ WHEN ANY KEY PRESSED
3	0.0V GND		
4	5.0V VDD	43	5.0V ⊓⊓ 1Hz
5	Remote A - 5.0V	44	5.0V
6	Remote B - 5.0V	45	0.0V / 5.0V depending on rot. position
7	0.0V		
8	N.C.	46	0.0V / 5.0V depending on rot. position
9	4.5V		
10	0.7V	47	0.0V
11	3.3V	48	5.0V
12	4.5V	49	N.C.
13	0.0V GND	50	N.C.
14	5.0 V VDD	51	2.5V 16MHz
15	0.0V GND	52	2.1V 16MHz
16	N.C.	53	5.0V VDD
17	0.6V	54	0.0V
18	0.0V	55	5.0V ⊓⊓
19	0.0V	56	0.0V ⊔⊔
20	5.0V LOCKED	57	0.0V
21	N.C.	58	DATA
22	0.0V	59	CLOCK RDS
23	N.C.	60	5.0V
24	5.0V	61	5.0V
25	0.0V	62	0.0V
26	5.0V	63	N.C.
27	5.0V	64	N.C.
28	5.0V VDD	65	5.0V
29	0.0V GND	66	5.0V VDD
30	0.0V	67	GND
31	5.0V	68	5.0V
32	N.C.	69	0.0V
33	N.C.	70	5.0V
34	5.0V	71	5.0V
35	5.0V	72	0.0V
36	0.0V	73	N.C.
37	0.0V	74	N.C.
38	5.0V ⊓⊓ WHEN ON/OFF KEY PRESSED	75	N.C.
		76	5.0V VDD
39	5.0V SCL	77	GND
40	5.0V SDA	78	N.C.
		79	0.0V GND
		80	5.0V

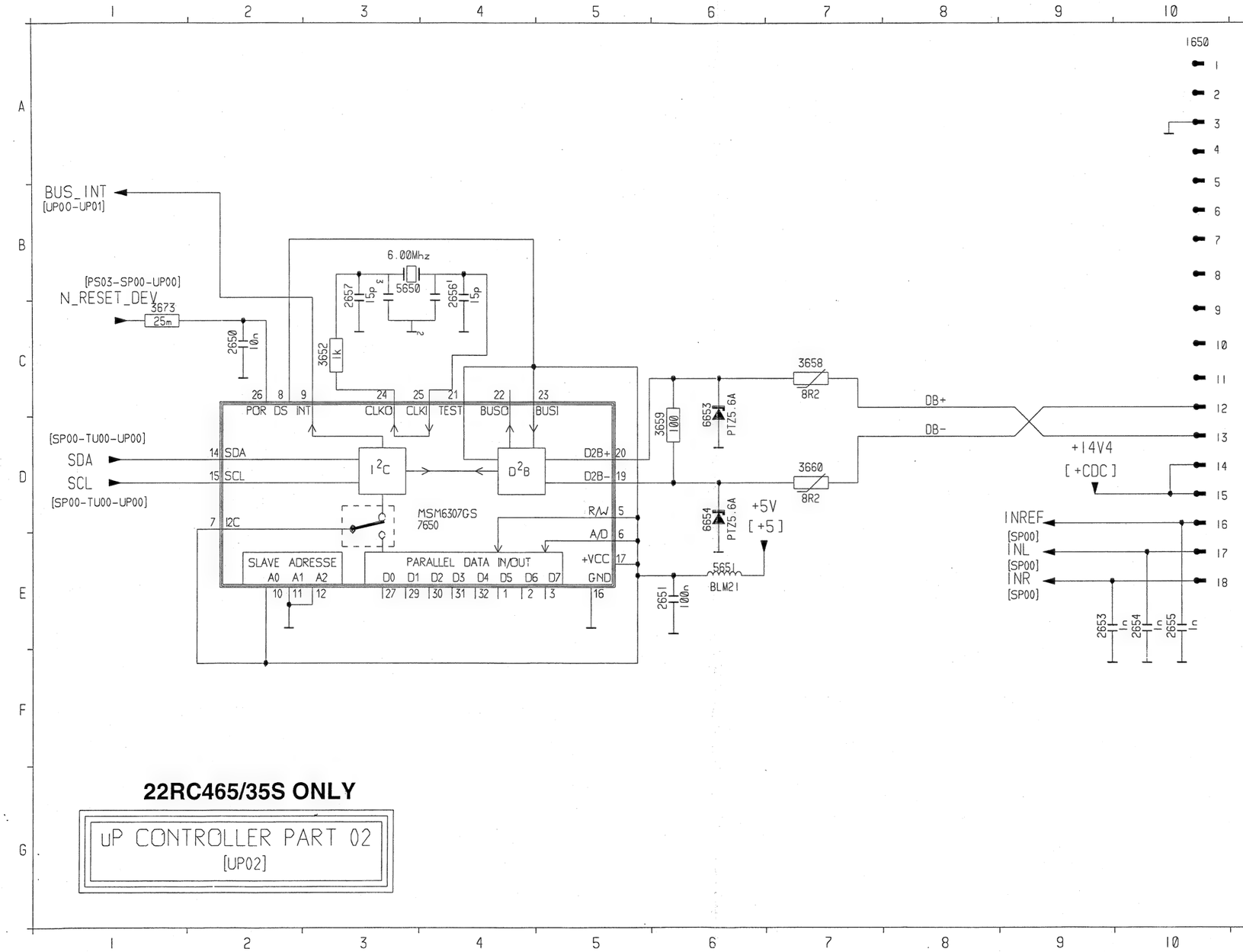

22RC465/35S ONLY

uP CONTROLLER PART 02
[UP02]

	1650	A10
	2650	C 2
	2651	E 6
	2653	E 9
	2654	E10
A	2655	E10
	2656	B 4
	2657	B 3
	3652	C 3
	3658	C 7
	3659	D 6
	3660	D 7
B	3673	C 1
	5650	B 3
	5651	E 6
	6653	C 6
	6654	D 6
	7650	D 3

FL H1
FR J1
PA_MUTE C1
POWER_MUTE B1
RL J1
RR I1

SI A5-G8
S1 ..... C16
S2 ..... C16
S3 ..... D16
S4 ..... D16
S5 ..... I16

S6 ..... I16
S7 ..... J16
S8 ..... J16
TEMP_SENSE G1

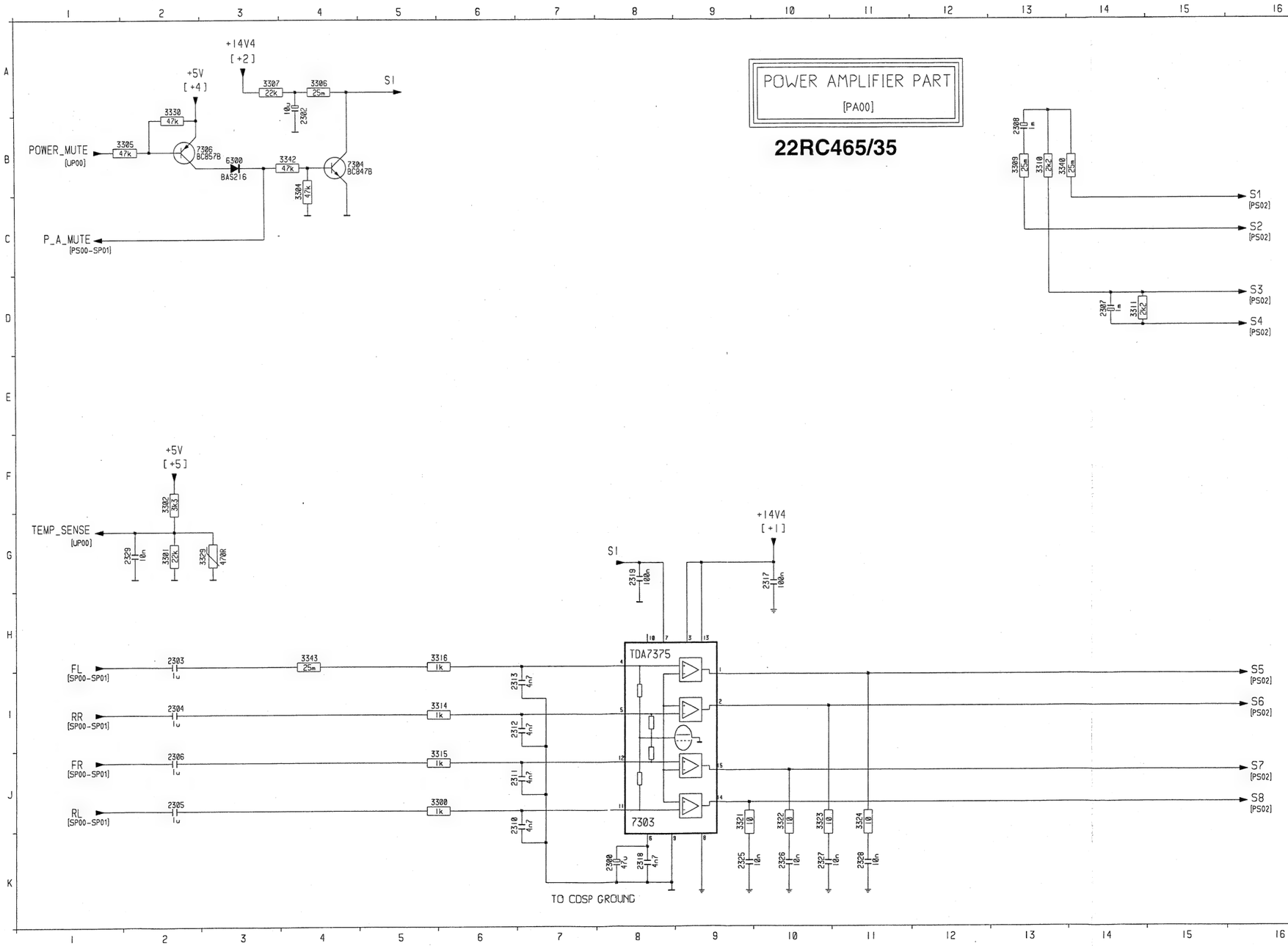

2300 K 8
2302 A 4
2303 H 2
2304 I 2
2305 J 2
2306 J 2
2307 D14
2308 B13
2310 J 6
2311 J 6
2312 I 6
2313 I 6
2317 G10
2318 K 8
2319 G 8
2325 K 9
2326 K10
2327 K10
2328 K11
2329 G 2
3300 J 6
3301 G 2
3302 F 2
3304 B 4
3305 B 2
3306 A 4
3307 A 3
3309 B13
3310 B13
3311 D14
3314 I 6
3315 J 6
3316 H 6
3321 J 9
3322 J10
3323 J10
3324 J11
3329 G 3
3330 A 2
3340 B13
3342 B 4
3343 H 4
6300 B 3
7303 J 8
7304 B 4
7306 B 2

FL	H1	SI	A5-A8-G8	S6	I16
FR	J1	S1	C16	S7	J16
PA_MUTE	C1	S2	C16	S8	J16
POWER_MUTE	B1	S3	D16	TEMP_SENSE	G1
RL	J1	S4	D16		
RR	I1	S5	I16		

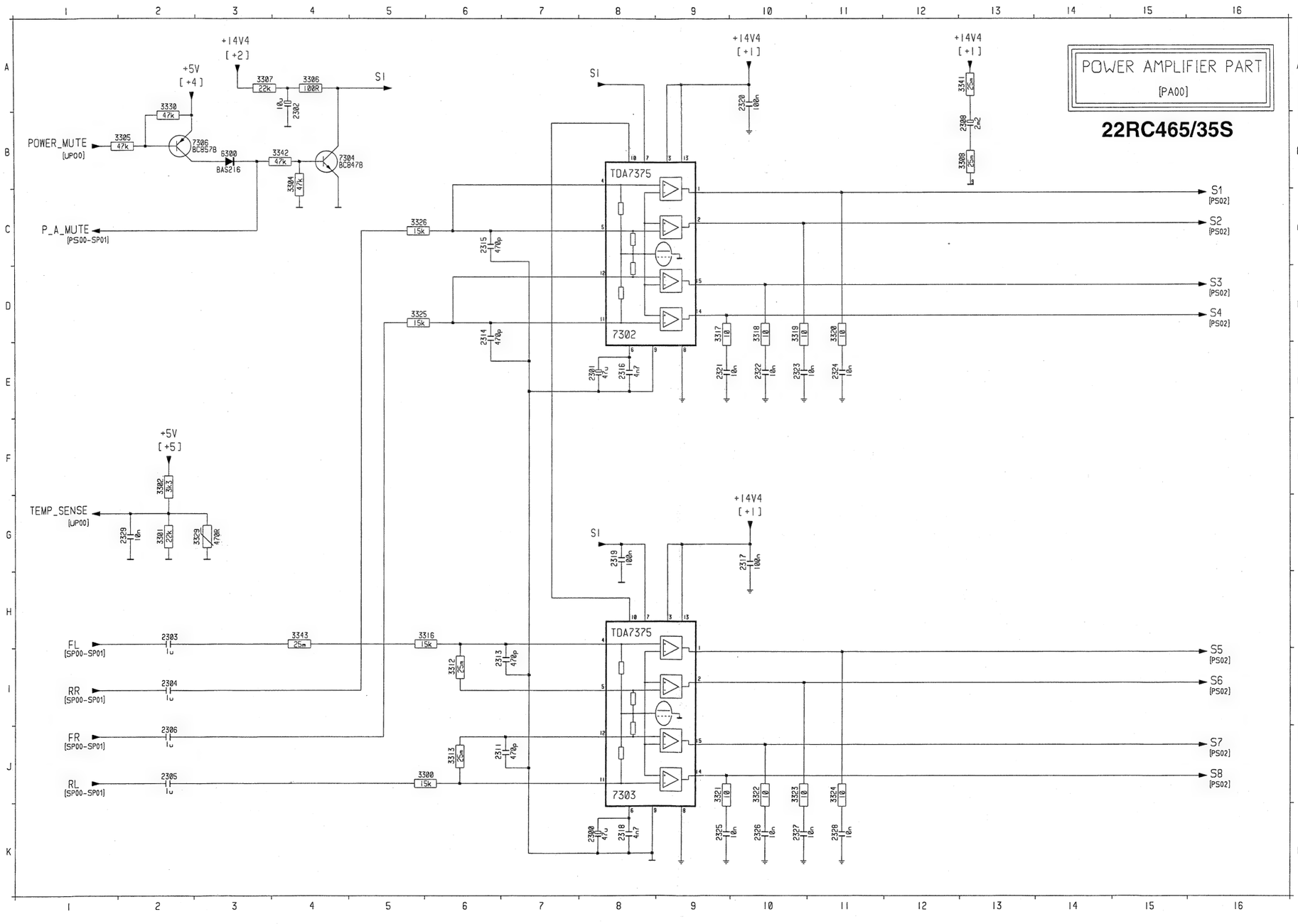

2300 K 8
2301 E 8
2302 A 4
2303 H 2
2304 I 2
2305 J 2
2306 J 2
2308 B13
2311 J 6
2313 I 6
2314 D 6
2315 C 6
2316 E 8
2317 G10
2318 K 8
2319 G 8
2320 A10
2321 E 9
2322 E10
2323 E10
2324 E11
2325 K 9
2326 K10
2327 K10
2328 K11
2329 G 2
3300 J 6
3301 G 2
3302 F 2
3304 B 4
3305 B 2
3306 A 4
3307 A 3
3308 B13
3312 I 6
3313 J 6
3316 H 6
3317 D 9
3318 D10
3319 D10
3320 D11
3321 J 9
3322 J10
3323 J10
3324 J11
3325 D 5
3326 C 5
3329 G 3
3330 A 2
3341 A13
3342 B 4
3343 H 4
G300 B 3
7302 D 8
7303 J 8
7304 B 4
7306 B 2

22RC465/35 22RC465/35S

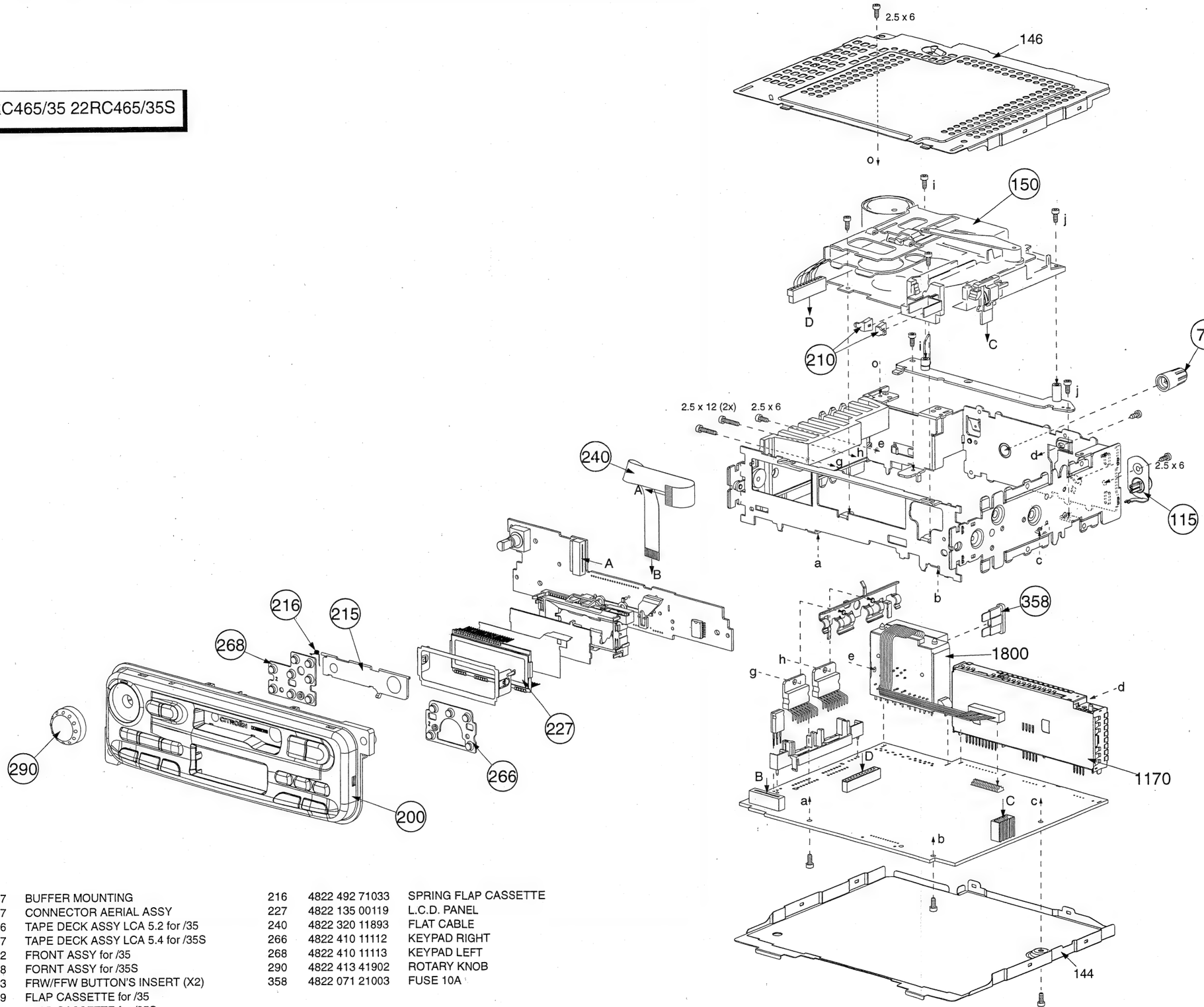

73	4822 532 12177	BUFFER MOUNTING
115	4822 265 10717	CONNECTOR AERIAL ASSY
150	4822 691 10466	TAPE DECK ASSY LCA 5.2 for /35
150	4822 691 10467	TAPE DECK ASSY LCA 5.4 for /35S
200	4822 459 04572	FRONT ASSY for /35
200	4822 459 04548	FORNT ASSY for /35S
210	4822 402 10463	FRW/FFW BUTTON'S INSERT (X2)
215	4822 443 10699	FLAP CASSETTE for /35
215	4822 443 10629	FLAP CASSETTE for /35S
216	4822 492 71033	SPRING FLAP CASSETTE
227	4822 135 00119	L.C.D. PANEL
240	4822 320 11893	FLAT CABLE
266	4822 410 11112	KEYPAD RIGHT
268	4822 410 11113	KEYPAD LEFT
290	4822 413 41902	ROTARY KNOB
358	4822 071 21003	FUSE 10A

Miscellaneous		
1170	4822 210 10721	TUNER IC96 12CV
1401	4822 252 51164	SM FUSE T1.5A 32V
1500	4822 242 10564	RES CER SM 16MHZ
1701	4822 267 40818	CON BM V 5P F 2.54
1800	4822 265 10941	CONN. BLOCK **/35S**
1800	4822 265 10955	CONN. BLOCK **/35**

2181	5322 122 32531	100pF 5% NP0
2182	5322 122 32654	22nF 10% X7R
2183	5322 122 32654	22nF 10% 50V X7R
2189	4822 126 13196	100nF 10% 25V X7R
2202	5322 122 34123	1nF 10% 50V X7R
2203	4822 126 13196	100nF 10% 25V X7R
2204	4822 126 13849	220nF 10% X7R 16V
2205	4822 126 13849	220nF 10% X7R 16V
2206	5322 126 10223	4,7nF 10% X7R 50V
2207	5322 126 10223	4,7nF 10% X7R 50V
2208	5322 122 32531	100pF 5% NP0 50V
2209	4822 122 33342	33nF 10% X7R 50V
2210	5322 122 32654	22nF 10% 50V
2211	4822 126 13196	100nF 10% X7R 25V
2212	5322 122 34098	10nF 10% X7R 50V
2213	5322 122 34098	10nF 10% X7R 50V
2214	5322 122 31863	330pF 5% NP0 50V
2215	5322 122 33538	150pF 5% NP0 50V
2216	5322 122 31863	330pF 5% NP0 50V
2217	5322 122 34123	1nF 10% X7R 50V
2218	5322 122 34123	1nF 10% X7R 50V
2219	5322 122 34098	10nF 10% X7R 50V
2220	5322 122 34123	1nF 10% X7R 50V
2221	5322 122 34123	1nF 10% X7R 50V
2222	5322 122 34098	10nF 10% X7R 50V
2223	5322 122 34098	10nF 10% X7R 50V
2224	5322 122 34123	1nF 10% X7R 50V
2225	4822 126 13196	100nF 10% X7R 25V
2226	5322 122 34123	1nF 10% X7R 50V
2228	4822 126 13196	100nF 10% X7R 25V
2229	5322 122 32531	100pF 5% NP0 50V
2230	5322 122 32531	100pF 5% NP0 50V
2231	4822 126 13196	100nF10% X7R 25V
2232	4822 126 13196	100nF10% X7R 25V
2233	5322 122 31863	330PF 5% 0805 NP0
2234	5322 122 31863	330PF 5% 0805 NP0
2235	5322 122 34123	1nF 10% X7R 50V
2236	5322 122 34123	1nF 10% X7R 50V
2237	4822 124 23279	22µF 20% 16V
2238	4822 124 23582	220µF 20% 10V
2239	4822 124 80453	100µF 20% 10V
2240	4822 124 23279	22µF 20% 16V
2241	4822 126 14043	1µF +80-20% 16V
2242	4822 124 23279	22µF 20% 16V
2243	4822 124 23282	1µF 20% 50V
2244	5322 122 34123	1nF10% X7R 50V
2245	5322 122 32448	10pF 5% NP0 50V
2246	5322 122 32448	10pF 5% NP0 50V
2247	5322 122 34123	1nF10% X7R 50V
2248	4822 122 33575	220pF 5% NP0 50V
2249	4822 122 33575	220pF 5% NP0 50V

2250	5322 122 32531	100pF 5% NP0 50V
2251	5322 122 32531	100pF 5% NP0 50V
2252	4822 126 13849	220nF10% 0805 X7R
2253	4822 126 13849	220nF10% 0805 X7R
2254	4822 126 13196	100nF10% 0805 X7R
2255	4822 124 23279	22 µF 20% 16V
2256	4822 124 22646	47 µF 20% 16V
2257	4822 126 14043	1µF +80-20% 16V
2258	4822 126 14043	1µF +80-20% 16V
2300	4822 124 22646	47µF 20%16V
2301	4822 124 22646	47µF 20%16V
2302	4822 124 41017	10µF 20% 16V
2303	4822 126 14043	1µF +80-20% 16V 0805
2304	4822 126 14043	1µF +80-20% 16V 0805
2305	4822 126 14043	1µF +80-20% 16V 0805
2306	4822 126 14043	1µF +80-20% 16V 0805
2307	4822 124 80766	1000µF 20% 25V
2308	4822 124 80766	1000µF 20% 25V **/35**
2308	4822 124 80769	2200µF 20% 16V **/35S**
2310	5322 126 10223	4N7 10% 50V
2311	5322 122 32268	470PF 5% 0805 NP0 **/35S**
2311	5322 126 10223	4N7 10% 50V 0805 **/35**
2312	5322 126 10223	4N7 10% 50V 0805
2313	5322 122 32268	470PF 5% 0805 NP0 **/35S**
2313	5322 126 10223	4N7 10% 50V 0805 **/35**
2314	5322 122 32268	470PF 5% 0805 NP0
2315	5322 122 32268	470PF 5% 0805 NP0
2316	5322 126 10223	4N7 10% X7R 50V
2317	4822 126 13196	100nF10% X7R 25V
2318	5322 126 10223	4N7 10% 50V 0805
2319	4822 126 13196	100nF10% X7R 25V
2320	4822 126 13196	100nF10% X7R 25V
2321	5322 122 34098	10nF10% X7R 50V
2322	5322 122 34098	10nF10% X7R 50V
2323	5322 122 34098	10nF10% X7R 50V
2324	5322 122 34098	10nF10% X7R 50V
2325	5322 122 34098	10nF10% X7R 50V
2326	5322 122 34098	10nF10% X7R 50V
2327	5322 122 34098	10nF10% X7R 50V
2328	5322 122 34098	10nF10% X7R 50V
2329	5322 122 34098	10nF10% X7R 50V
2401	5322 126 10223	4N7 10% X7R 50V
2402	4822 122 33342	33nF10% X7R 50V
2405	4822 124 80769	2200µF 20% 16V
2407	5322 122 32268	470pF5% NP0 50V
2408	4822 126 13849	220nF10% X7R 16V
2409	4822 126 13849	220nF10% X7R 16V
2410	4822 124 80766	1000µF 20% 25V
2411	4822 124 80453	100µF 20% 10V
2412	4822 124 23281	33µF 20% 16V
2413	4822 126 13343	47nF10% X7R 25V
2414	4822 124 23282	1µF 20% 50V
2415	4822 122 33575	220pF5% NP0 50V
2416	4822 124 22646	47µF 20% 16V
2417	4822 126 14043	1µF +80-20% 16V
2418	4822 126 13849	220nF10% X7R 16V
2419	5322 126 10223	4N7 10% X7R 50V
2420	4822 126 13196	100nF10% X7R 25V
2421	4822 126 14043	1µF +80-20% 16V
2423	5322 122 32654	22nF10% X7R 50V

2425	4822 126 13849	220nF10% X7R 16V
2426	4822 126 13343	47nF10% X7R 25V
2428	5322 122 34098	10nF10% X7R 50V
2429	5322 122 34098	10nF10% X7R 50V
2431	4822 124 41017	10µF 20% 16V
2434	4822 126 13196	100nF10% X7R 25V
2438	4822 126 13196	100nF10% X7R 25V
2516	5322 122 33869	15pF5% NP0 50V
2517	5322 122 33869	15pF5% NP0 50V
2552	4822 122 33342	33nF10% X7R 50V
2553	4822 126 13196	100nF10% X7R 25V
2554	4822 126 13196	100nF10% X7R 25V
2561	5322 122 34098	10nF10% X7R 50V
2577	4822 122 33342	33nF10% X7R 50V
2578	4822 122 33342	33nF10% X7R 50V
2650	5322 122 34098	10nF10% X7R 50V
2651	4822 126 13196	100nF10% X7R 25V
2653	5322 122 34123	1nF10% 50V 0805 X7R
2654	5322 122 34123	1nF10% 50V 0805 X7R
2655	5322 122 34123	1nF10% 50V 0805 X7R
2656	5322 122 33869	15pF5% NP0 50V
2657	5322 122 33869	15pF5% NP0 50V
2700	4822 124 41017	10µF 20% 16V
2701	4822 124 41017	10µF 20% 16V
2702	5322 122 34098	10nF10% X7R 50V
2703	5322 122 34098	10nF10% X7R 50V
2704	4822 124 80453	100µF 20% 10V
2705	5322 122 32654	22nF 10% X7R 50V
2706	4822 124 41017	10µF 20% 16V
2707	4822 124 80453	100µF 20% 10V
2708	5322 116 80853	560pF 5% NP0 50V
2709	5322 116 80853	560pF 5% NP0 50V
2710	5322 116 80853	560pF 5% NP0 50V
2711	5322 116 80853	560pF 5% NP0 50V
2800	4822 124 41017	10µF 20% 16V
2801	5322 122 34123	1nF10% X7R 50V
2805	5322 122 34123	1nF10% X7R 50V
2815	5322 122 32268	470pF 5% NP0 50V
2816	5322 122 32268	470pF 5% NP0 50V
2817	5322 122 32268	470pF 5% NP0 50V
2818	5322 122 32268	470pF 5% NP0 50V
2819	5322 122 32268	470pF 5% NP0 50V
2820	5322 122 32268	470pF 5% NP0 50V
2821	5322 122 32268	470pF 5% NP0 50V
2822	5322 122 32268	470pF 5% NP0 50V
2825	5322 122 32268	470pF 5% NP0 50V
2826	5322 122 32268	470pF 5% NP0 50V
2850	5322 122 34123	1nF10% X7R 50V
2851	5322 122 34123	1nF10% X7R 50V
2852	5322 122 34098	10nF10% X7R 50V
2853	5322 122 34123	1nF10% X7R 50V
2854	5322 122 34098	10nF10% X7R 50V
2856	5322 122 32531	100pF5% NP0 50V
2857	5322 122 32531	100pF5% NP0 50V
2858	5322 122 32531	100pF5% NP0 50V

3174	4822 051 20332	3K3 5% 0,1W
3175	4822 051 20102	1KΩ 5% 0,1W
3178	4822 051 20008	JUMP. MAX 0R05 0805

3179	4822 051 20008	JUMP. MAX 0R05 0805
3186	4822 117 11449	2K2 5% 0,1W
3192	4822 051 20008	JUMP. MAX 0R05 0805
3201	4822 051 20273	27KΩ 5% 0,1W
3202	4822 051 20273	27KΩ 5% 0,1W
3203	4822 117 11449	2K2 5% 0,1W
3204	4822 117 11449	2K2 5% 0,1W
3205	4822 117 10833	10KΩ 5% 0,1W
3206	4822 117 11503	220Ω 5% 0,1W
3207	4822 051 20101	100Ω 5% 0,1W
3208	4822 051 20101	100Ω 5% 0,1W
3209	4822 051 20104	100KΩ 5% 0,1W
3210	4822 051 20332	3K3 5% 0,1W
3211	4822 051 20332	3K3 5% 0,1W
3212	4822 117 10833	10KΩ 5% 0,1W
3213	4822 051 20562	5K6 5% 0,1W
3214	4822 051 20101	100Ω 5% 0,1W
3215	4822 051 20008	JUMP. MAX 0R05
3216	4822 051 20272	2K7 5% 0,1W
3217	4822 051 20101	100Ω 5% 0,1W
3218	4822 051 20272	2K7 5% 0,1W
3219	4822 051 20272	2K7 5% 0,1W
3220	4822 051 20101	100Ω 5% 0,1W
3221	4822 051 20101	100Ω 5% 0,1W
3222	4822 051 20272	2K7 5% 0,1W
3223	4822 117 10965	18KΩ 5% 0,1W
3224	4822 051 20102	1KΩ 5% 0,1W
3225	4822 051 20473	47KΩ 5% 0,1W
3226	4822 117 11503	220Ω 5% 0,1W
3227	4822 117 11503	220Ω 5% 0,1W
3228	4822 051 20273	27KΩ 5% 0,1W
3229	4822 051 20472	4K7 5% 0,1W
3230	4822 051 20472	4K7 5% 0,1W
3231	4822 051 20473	47KΩ 5% 0,1W
3232	4822 051 20008	JUMP MAX 0R05
3233	4822 051 20008	JUMP MAX 0R05
3234	4822 117 11503	220Ω 5% 0,1W
3235	4822 117 11503	220Ω 5% 0,1W
3236	4822 051 20101	100Ω 5% 0,1W
3241	4822 051 20105	1M 5% 0,1W
3300	4822 051 20102	1KΩ 5% 0,1W **/35**
3300	4822 051 20153	15KΩ 5% 0805 **/35S**
3301	4822 051 20223	22KΩ 5% 0,1W
3302	4822 051 20332	3K3 5% 0,1W
3304	4822 051 20473	47KΩ 5% 0,1W
3305	4822 051 20473	47KΩ 5% 0,1W
3306	4822 051 20008	JUMP MAX 0R05 **/35**
3306	4822 051 20101	100Ω 5% 0,1W **/35S**
3307	4822 051 20223	22KΩ 5% 0,1W
3308	4822 051 10008	JUMP MAX 0R05 1206
3309	4822 051 10008	JUMP MAX 0R05 1206
3310	4822 117 11449	2K2 5% 0,1W
3311	4822 117 11449	2K2 5% 0,1W
3312	4822 051 20008	JUMP MAX 0R05 0805
3313	4822 051 20008	JUMP MAX 0R05 0805
3314	4822 051 20102	1KΩ 5% 0,1W
3315	4822 051 20102	1KΩ 5% 0,1W
3316	4822 051 20102	1KΩ 5% 0,1W **/35**
3316	4822 051 20153	15KΩ 5% 0,1W **/35S**
3317	4822 051 20109	10Ω 5% 0,1W

3318	4822 051 20109	10Ω 5% 0,1W	3487	4822 117 10833	10KΩ 5% 0,1W
3319	4822 051 20109	10Ω 5% 0,1W	3488	4822 117 10833	10KΩ 5% 0,1W
3320	4822 051 20109	10Ω 5% 0,1W	3489	4822 051 20224	220KΩ 5%0,1W
3321	4822 051 20109	10Ω 5% 0,1W	3516	4822 051 20101	100Ω 5% 0,1W
3322	4822 051 20109	10Ω 5% 0,1W	3517	4822 051 20101	100Ω 5% 0,1W
3323	4822 051 20109	10Ω 5% 0,1W	3523	4822 051 20472	4K7 5% 0,1W
3324	4822 051 20109	10Ω 5% 0,1W	3524	4822 051 20472	4K7 5% 0,1W
3325	4822 051 20153	15KΩ 5% 0,1W	3525	4822 051 20473	47KΩ 5% 0,1W
3326	4822 051 20153	15KΩ 5% 0,1W	3526	4822 051 20473	47KΩ 5% 0,1W
3329	4822 116 40255	PTC 470Ω 5%0 16V	3551	4822 051 20008	JUMP. MAX 0R05 0805
3330	4822 051 20473	47KΩ 5% 0,1W	3556	4822 051 20223	JUMP. MAX 0R05 0805
3340	4822 051 10008	JUMP MAX 0R05 1206	3557	4822 051 20473	47KΩ 5% 0,1W
3341	4822 051 10008	JUMP MAX 0R05 1206	3558	4822 051 20473	47KΩ 5% 0,1W
3342	4822 051 20473	47KΩ 5% 0,1W	3567	4822 051 20473	47KΩ 5% 0,1W
3343	4822 051 20008	JUMP. MAX 0R05 0805	3568	4822 051 20101	100Ω 5% 0,1W
3400	4822 051 10008	JUMP MAX 0R05 1206	3569	4822 051 20273	27KΩ 5% 0,1W
3402	4822 051 20473	47KΩ 5% 0,1W	3571	4822 051 20471	470Ω 5% 0,1W
3403	4822 051 20473	47KΩ 5% 0,1W	3572	4822 051 20104	100KΩ 5% 0,1W
3404	4822 051 20224	220KΩ 5% 0,1W	3574	4822 051 20473	47KΩ 5% 0,1W
3405	4822 051 20104	100KΩ 5% 0,1W	3576	4822 051 20223	22KΩ 5% 0,1W
3406	4822 051 20154	150KΩ 5% 0,1W	3588	4822 117 10833	10KΩ 5% 0,1W
3408	4822 051 20273	27KΩ 5% 0,1W	3589	4822 117 10833	10KΩ 5% 0,1W
3409	4822 051 20472	4K7 5% 0,1W	3591	4822 117 10833	10KΩ 5% 0,1W
3410	4822 051 20473	47KΩ 5% 0,1W	3592	4822 051 20008	JUMP. MAX 0R05 0805
3411	4822 051 20473	47KΩ 5% 0,1W	3594	4822 051 20223	22KΩ 5% 0,1W
3412	4822 051 20101	100Ω 5% 0,1W	3595	4822 051 20473	47KΩ 5% 0,1W
3413	4822 051 20102	1KΩ 5% 0,1W	3596	4822 051 20473	47KΩ 5% 0,1W
3414	4822 116 40267	PTC 3R3 PM25 20V	3597	4822 051 20102	1KΩ 5% 0,1W
3417	4822 051 20154	150KΩ 5% 0,1W	3652	4822 051 20102	1KΩ 5% 0,1W
3418	4822 051 20471	470Ω 5% 0805 **/35**	3658	4822 116 40221	PTC PTH 60G31AR8R2MT2
3418	4822 117 11503	220Ω 5% 0805 **/35S**	3659	4822 051 20101	100Ω 5% 0,1W
3419	4822 051 20471	470Ω 5% 0805 **/35**	3660	4822 116 40221	PTC PTH 60G31AR8R2MT2
3419	4822 117 11503	220Ω 5% 0805 **/35S**	3672	4822 051 20008	CHIP JUMPER 0805
3420	4822 051 20471	470Ω 5% 0805 **/35**	3673	4822 051 20008	CHIP JUMPER 0805
3420	4822 117 11503	220Ω 5% 0805 **/35S**	3690	4822 051 10008	CHIP JUMPER 1206
3421	4822 051 20471	470Ω 5% 0805 **/35**	3700	4822 051 20273	27KΩ 5% 0,1W
3421	4822 117 11503	220Ω 5% 0805 **/35S**	3702	4822 051 20122	1K2 5% 0,1W
3422	4822 051 20473	47KΩ 5% 0,1W	3703	4822 051 20334	330KΩ 5%0,1W
3423	4822 051 20008	0,1W JUMP	3704	4822 051 20822	8K2 5% 0,1W
3424	4822 051 20008	0,1W JUMP	3705	4822 117 10965	18KΩ 5% 0,1W
3430	4822 051 20109	10Ω 5% 0,1W	3709	4822 051 20334	330KΩ 5% 0,1W
3433	4822 051 20472	4K7 5% 0,1W	3710	4822 051 20822	8K2 5% 0,1W
3435	4822 051 20104	100KΩ 5% 0,1W	3711	4822 051 20122	1K2 5% 0,1W
3436	4822 051 20333	33KΩ 5% 0,1W	3712	4822 051 20104	100KΩ 5% 0,1W
3442	4822 051 20224	220KΩ 5% 0,1W	3713	4822 051 20104	100KΩ 5% 0,1W
3444	4822 051 20102	1KΩ 5% 0,1W	3714	4822 051 20104	100KΩ 5% 0,1W
3445	4822 051 20224	220KΩ 5% 0,1W	3715	4822 051 20104	100KΩ 5% 0,1W
3447	4822 051 20224	220KΩ 5% 0,1W	3716	4822 051 20109	10Ω 5% 0,1W
3451	4822 051 20224	220KΩ 5% 0,1W	3717	4822 117 10965	18KΩ 5% 0,1W
3454	4822 051 20224	220KΩ 5% 0,1W	3739	4822 051 20008	JUMP MAX 0R05 0805
3458	4822 051 20104	100KΩ 5% 0,1W	3742	4822 051 20008	JUMP MAX 0R05 0805
3468	4822 051 20008	0,1W JUMP	3743	4822 051 20102	1KΩ 5% 0,1W
3470	4822 051 20104	100KΩ 5% 0,1W	3744	4822 051 20228	2R2 5% 0,1W
3471	4822 051 20224	220KΩ 5% 0,1W	3745	4822 051 20561	560Ω 5% 0,1W
3472	4822 051 20102	1KΩ 5% 0,1W	3747	4822 051 20473	47KΩ 5% 0,1W
3473	4822 051 20473	47KΩ 5% 0,1W	3748	4822 051 20473	47KΩ 5% 0,1W
3474	4822 051 20109	10Ω 5% 0,1W	3751	4822 051 20008	JUMP MAX 0R05 0805
3475	4822 051 20109	10Ω 5% 0,1W	3754	4822 051 20104	100KΩ 5% 0,1W
3485	4822 051 20224	220KΩ 5% 0,1W	3755	4822 117 11449	2K2 5% 0,1W
3486	4822 051 20273	27KΩ 5% 0,1W	3756	4822 051 20008	JUMP MAX 0R05 0805

PCS 88 709

3762	4822 051 20473	47KΩ 5% 0,1W	5400	4822 157 70935	COIL 97UH 10A **/35S**
3763	4822 051 20008	JUMP MAX 0R05 0805	5401	4822 157 11206	LAL04 A 0U22 20%
3764	4822 051 20473	47KΩ 5% 0,1W	5501	4822 157 71206	EMI 100MHZ 600R
3770	4822 051 20102	1KΩ 5% 0,1W	5503	4822 157 71206	EMI 100MHZ 600R
3771	4822 051 20102	1KΩ 5% 0,1W	5650	4822 242 10709	RES CER 6MHZ
3772	4822 051 20102	1KΩ 5% 0,1W	5651	4822 157 71206	EMI 100MHZ 600R
3773	4822 051 20228	2R2 5% 0,1W			
3774	4822 051 20228	2R2 5% 0,1W			
3775	4822 051 20228	2R2 5% 0,1W			
3805	4822 117 10833	10KΩ 5% 0,1W	6200	4822 130 10654	BAT254
3806	4822 051 20332	3K3 5% 0,1W	6300	4822 130 83757	BAS216
3807	4822 051 20008	JUMP. MAX 0R05 0805	6401	4822 130 10488	S3G
3808	4822 051 20473	47KΩ 5% 0,1W	6406	4822 130 10656	UDZ
3809	4822 051 20473	47KΩ 5% 0,1W	6407	4822 130 10655	1SR154-400
3810	4822 051 20008	JUMP. MAX 0R05 0805	6410	4822 130 83757	BAS216
3812	4822 051 20102	1KΩ 5% 0,1W	6412	4822 130 10655	1SR154-400
3813	4822 117 10833	10KΩ 5% 0,1W	6413	4822 130 10654	BAT254
3814	4822 051 20473	47KΩ 5% 0,1W	6414	4822 130 83757	BAS216
3815	4822 051 20473	47KΩ 5% 0,1W	6415	4822 130 83757	BAS216
3816	4822 051 20473	47KΩ 5% 0,1W	6421	4822 130 83757	BAS216
3817	4822 051 20473	47KΩ 5% 0,1W	6422	4822 130 83757	BAS216
3818	4822 051 20473	47KΩ 5% 0,1W	6424	4822 130 83757	BAS216
3819	4822 051 20223	22KΩ 5% 0,1W	6425	4822 130 83757	BAS216
3820	4822 051 20008	JUMP. MAX 0R05 0805	6426	4822 130 83757	BAS216
3822	4822 051 20104	100KΩ 5% 0,1W	6427	4822 130 83757	BAS216
3828	4822 051 20101	100Ω 5% 0,1W	6432	4822 130 83757	BAS216
3829	4822 051 20104	100KΩ 5% 0,1W	6653	4822 130 10657	DIO REG SM PTZ 5.6A
3836	4822 051 20008	JUMP. MAX 0R05 0805	6654	4822 130 10657	DIO REG SM PTZ 5.6A
3844	4822 051 20473	47KΩ 5% 0,1W	6740	4822 130 10655	1SR154-400
3845	4822 051 20473	47KΩ 5% 0,1W	6800	4822 130 10658	UDZ
3850	4822 051 20008	JUMP. MAX 0R05 0805	6850	4822 130 83757	BAS216
3852	4822 117 10833	10KΩ 5% 0,1W	6851	4822 130 10185	UDZ
3854	4822 051 20008	JUMP. MAX 0R05 0805	6852	4822 130 10185	UDZ
3855	4822 051 20104	100KΩ 5% 0,1W			
3856	4822 051 20223	22KΩ 5% 0,1W			
3857	4822 051 20333	33KΩ 5% 0,1W	7172	4822 130 60511	BC847B
3859	4822 051 20331	330Ω 5% 0,1W	7200	4822 130 60511	BC847B
3860	4822 051 20101	100Ω 5% 0,1W	7201	4822 209 15479	SAA7701H
3861	4822 051 20104	100KΩ 5% 0,1W	7202	4822 209 33985	IC SM TDA8579T/N1
3862	4822 051 20331	330Ω 5% 0,1W	7302	4822 209 33629	IC TDA7375
3863	4822 051 20101	100Ω 5% 0,1W	7303	4822 209 33629	IC TDA7375
3864	4822 051 20104	100KΩ 5% 0,1W	7304	4822 130 60511	BC847B
3865	4822 051 20101	100Ω 5% 0,1W	7306	5322 130 60508	BC857B
3866	4822 051 20101	100Ω 5% 0,1W	7400	5322 209 14482	HEF4069UBT
3871	4822 051 20101	100Ω 5% 0,1W	7401	4822 209 14814	L4949EP
3872	4822 051 20101	100Ω 5% 0,1W	7402	5322 209 14877	HEF4528BT
3882	4822 051 10008	JUMP. MAX 0R05 1206	7404	4822 209 14815	IC VN06
3886	4822 051 20008	JUMP. MAX 0R05 0805	7405	4822 209 90566	IC L4885CV
			7406	4822 209 90567	IC L7805ABV
			7407	5322 130 60508	BC857B
			7408	4822 130 60511	BC847B
			7410	4822 130 60511	BC847B
5172	4822 157 10975	EL0405 S 120U 10%	7418	4822 209 33162	MC4558IDT
5173	4822 157 71184	EL0405 S 10U 10%	7505	5322 130 60508	BC857B
5174	4822 157 71206	EMI 100MHZ 600R	7506	5322 209 11102	HEF4052BT
5200	4822 157 71206	EMI 100MHZ 600R	7513	4822 209 15535	P89CE560-RC465/35/35S
5201	4822 242 10565	RES XTL 36MHZ86	7515	4822 209 15689	EEPROM SEC **/35**
5202	4822 157 71184	EL0405 S 10U 10%	7515	4822 209 15691	EEPROM SEC **/35S**
5203	4822 157 10976	EL0405 S 68U 10%	7650	4822 209 32743	MSM6307GS-VK
5204	4822 157 71206	EMI 100MHZ 600R	7701	4822 209 15349	TEA0676T
5205	4822 157 10977	IND 4.7UH 10% 0805			
5400	4822 157 70839	COIL 160UH 5A **/35**	7740	4822 130 44283	BC636

7741	4822 130 60511	BC847B
7743	4822 130 42615	BC817-40
7745	4822 130 60511	BC847B
7800	4822 130 42132	BC807
7801	4822 130 60511	BC847B
7802	4822 130 10659	TRA POW 2SD2039
7803	4822 130 60511	BC847B
7804	5322 130 60508	BC857B
7805	5322 130 60508	BC857B
7806	4822 130 60511	BC847B
7840	5322 130 60508	BC857B
7850	4822 130 60511	BC847B
7880	4822 209 33238	HEF4077BT

FRONT ELECTRICAL PARTS

Miscellaneous

1902	4822 134 10085	LAMP 10V 60MA
1903	4822 134 10085	LAMP 10V 60MA
1904	4822 134 10085	LAMP 10V 60MA
1932	4822 135 00119	LCD ASSY
1981	4822 101 30873	ROT ENCODER 15P

2901	4822 126 13196	100nF 10% 25V
2902	4822 126 13196	100nF 10% 25V
2903	4822 126 13196	100nF 10% 25V
2904	4822 126 13196	100nF 10% 25V
2993	4822 126 13343	47nF 10% 25V
2994	4822 126 13343	47nF 10% 25V

3901	4822 051 20272	2K7 5% 0,1W
3902	4822 051 20272	2K7 5% 0,1W
3903	4822 051 20272	2K7 5% 0,1W
3904	4822 051 20272	2K7 5% 0,1W
3905	4822 117 11449	2K2 5% 0,1W
3906	4822 117 11449	2K2 5% 0,1W
3907	4822 117 11449	2K2 5% 0,1W
3908	4822 117 11449	2K2 5% 0,1W
3909	4822 117 11449	2K2 5% 0,1W
3910	4822 117 11449	2K2 5% 0,1W
3911	4822 117 11449	2K2 5% 0,1W
3912	4822 117 11449	2K2 5% 0,1W
3913	4822 117 11449	2K2 5% 0,1W
3914	4822 051 20272	2K7 5% 0,1W
3915	4822 051 20272	2K7 5% 0,1W
3916	4822 051 20272	2K7 5% 0,1W
3917	4822 051 20272	2K7 5% 0,1W
3918	4822 051 20272	2K7 5% 0,1W
3919	4822 117 11449	2K2 5% 0,1W
3920	4822 117 11449	2K2 5% 0,1W
3921	4822 117 11449	2K2 5% 0,1W
3922	4822 051 20272	2K7 5% 0,1W
3923	4822 051 20272	2K7 5% 0,1W
3924	4822 051 20332	3K3 5% 0,1W
3925	4822 051 20184	180K 5% 0,1W
3926	4822 117 11449	2K2 5% 0,1W
3927	4822 117 10833	10KΩ 5% 0,1W
3928	4822 051 20101	100Ω 5% 0,1W
3929	4822 051 20101	100 5% 0,1W
3930	4822 117 10833	10KΩ 5% 0,1W
3935	4822 117 11449	2K2 5% 0,1W
3936	4822 117 11449	2K2 5% 0,1W
3937	4822 117 11449	2K2 5% 0,1W
3938	4822 117 11449	2K2 5% 0,1W
3939	4822 117 11449	2K2 5% 0,1W
3940	4822 051 20472	4K7 5% 0,1W
3941	4822 051 20332	3K3 5% 0,1W
3942	4822 051 20332	3K3 5% 0,1W
3943	4822 051 20332	3K3 5% 0,1W
3944	4822 051 20332	3K3 5% 0,1W
3945	4822 051 20332	3K3 5% 0,1W
3946	4822 117 11449	2K2 5% 0,1W
3947	4822 051 20008	JUMP. MAX 0R05 0805
3954	4822 051 20473	47K 5% 0,1W
3955	4822 051 20331	330Ω 5% 0,1W
3956	4822 051 20272	2K7 5% 0,1W
3981	4822 051 20472	4K7 5% 0,1W
3982	4822 051 20472	4K7 5% 0,1W
3983	4822 051 20223	22KΩ 5% 0,1W
3984	4822 051 20223	22KΩ 5% 0,1W

6901	4822 130 10912	LED SM LPT670-H
6902	4822 130 10912	LED SM LPT670-H
6903	4822 130 10912	LED SM LPT670-H
6904	4822 130 10912	LED SM LPT670-H
6905	4822 130 10912	LED SM LPT670-H
6906	4822 130 10912	LED SM LPT670-H
6907	4822 130 10912	LED SM LPT670-H
6908	4822 130 10912	LED SM LPT670-H
6909	4822 130 10912	LED SM LPT670-H
6910	4822 130 10912	LED SM LPT670-H
6911	4822 130 10912	LED SM LPT670-H
6912	4822 130 10912	LED SM LPT670-H
6913	4822 130 10912	LED SM LPT670-H
6917	4822 130 10848	LED LSPT670

7901	5322 209 11578	IC PCF8574T
7902	4822 209 15134	IC PCF8576CT
7909	4822 130 60511	BC847B

Car cassette deck LCA 5.2

LCA 5.4

Service
Service
Service

Supplement

ERSATZTEILE
für Philips Car Systems
erhalten Sie bei:
KiVi Service GmbH
Windmühlenstr. 41 · 31178 Giesen/Emmerke
Tel.: 0 51 21 / 6 00 20 · Fax 0 51 21 / 60 02 54

PHIL -05363

Service Manual

12 V

This supplement should be used together with the LCA 2.4 Service Manual with service code: 4822 725 23523.

4728

This supplement contains: technical data, general information, connector and switch overviews, exploded views and partslists for both the LCA 5.2 and LCA 5.4 tape decks.
For all parts not mentioned here, refer to the LCA 2.4 Service Manual.

TECHNICAL DATA

Operating voltage	: 9 - 16V (nom. 13.2V)
Tape speed	: 4.76cm/sec ± 0.5%
Wow & Flutter	: ≤ 0.35% RMS (+10 - +45°C)
Crosstalk (track 2-3)	: < -40dB
Fast wind time	: ≤ 115sec (C-60)
Number of tracks	: 2x2
Channel separation (Tracks 1-2/3-4)	: > 35dB

Published by Philips Car Systems Printed in The Netherlands ©Copyright reserved Subject to modification 4822 725 25459

PCS 81 636

PHILIPS

GENERAL

The differences between the LCA 2.4 and **LCA 5.2** are:
- capstan motor at left side instead of rear
- no "Key-Off" standby
- no Automatic Music sensor system
- no Metal / Ferro tape selector switch
- interface connector
- changed position of wind buttons

The differences between the LCA 2.4 and **LCA 5.4** are:
- capstan motor at left side instead of rear
- interface connector
- changed position of wind buttons

PCS 81 637

LCA 5.2 CONNECTOR AND SWITCH OVERVIEW

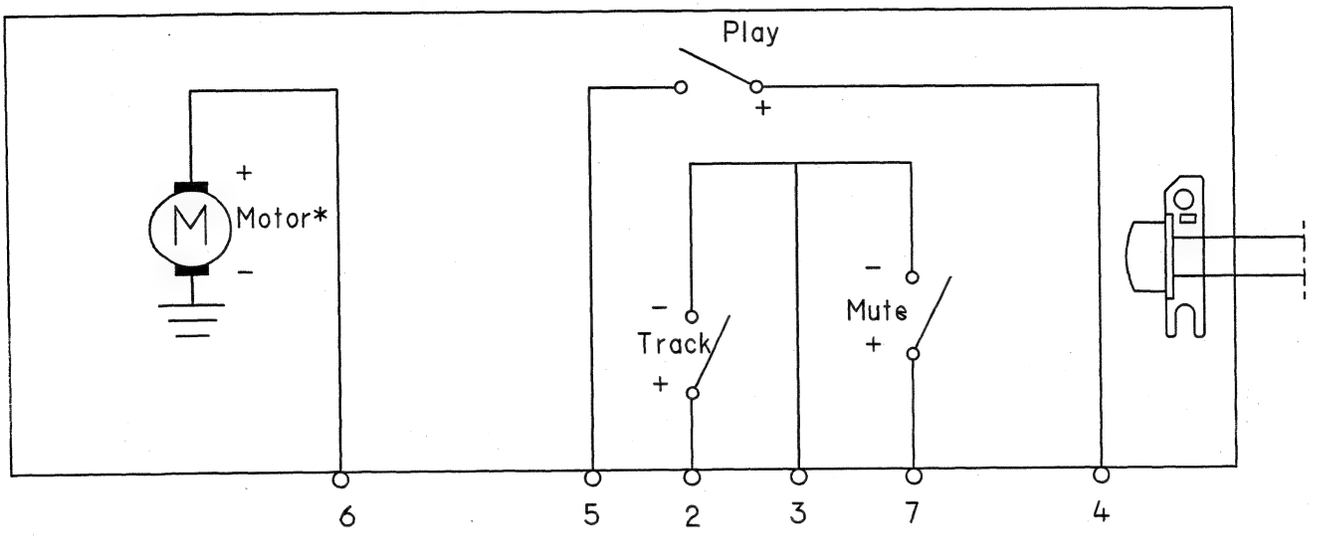

*Remark: Motor – internally connected to chassis!

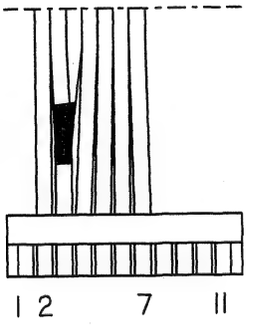

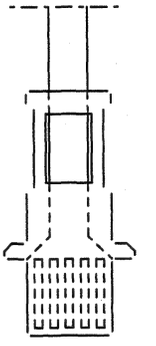

COM	common
1	left forward
2	right forward
3	right reverse
4	left reverse

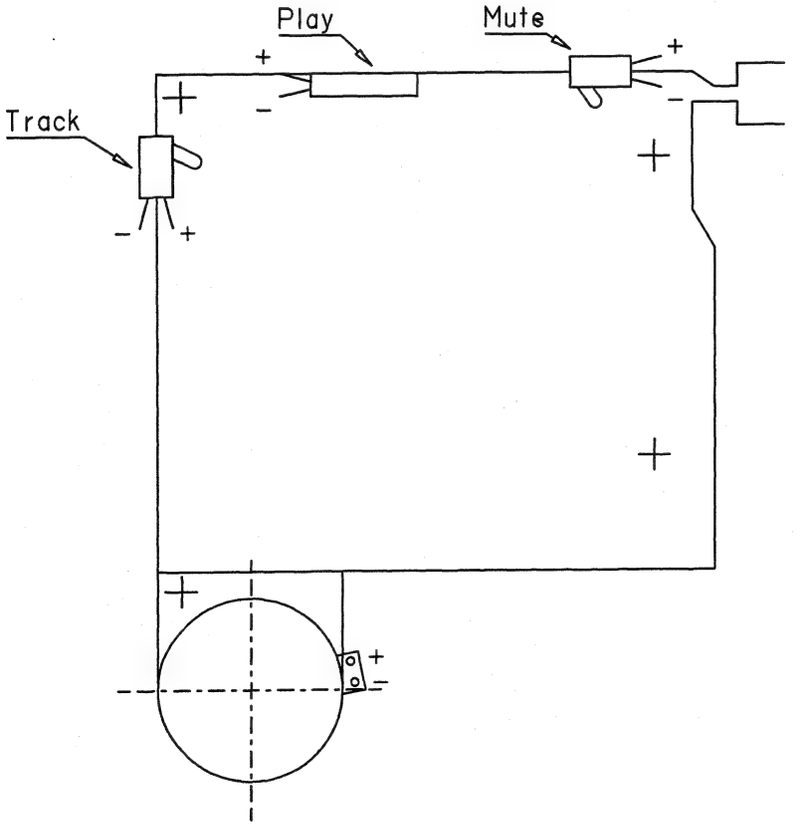

	colour	function
1	--	---
2	black	+Track Sw
3	red brown	COMMON
4	orange	+14V
5	yellow	Play Sw
6	green	Motor
7	blue	Mute SW
8	--	---
9	--	---
10	--	---
11	--	---

LCA 5.4 CONNECTOR AND SWITCH OVERVIEW

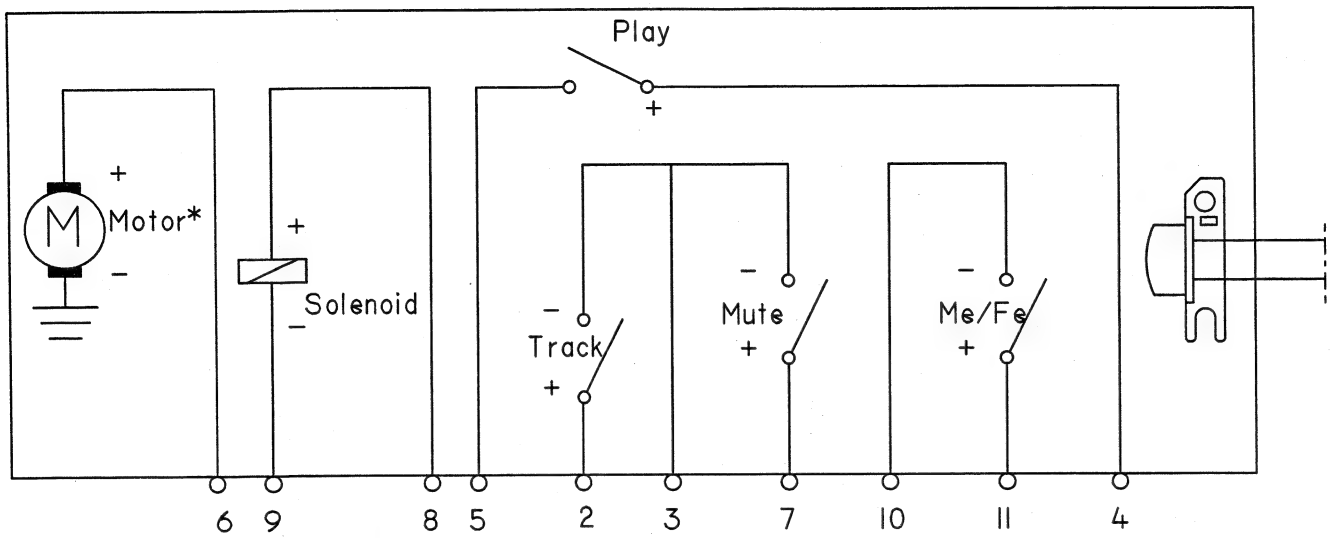

*Remark: Motor – internally connected to chassis!

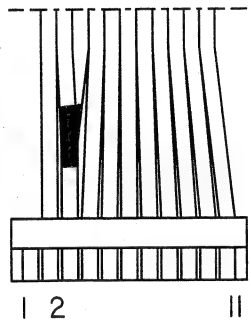

← round conductor flat cable

← connector

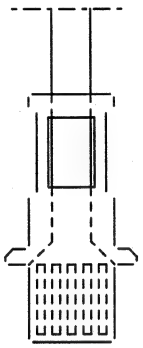

COM	common
1	left forward
2	right forward
3	right reverse
4	left reverse

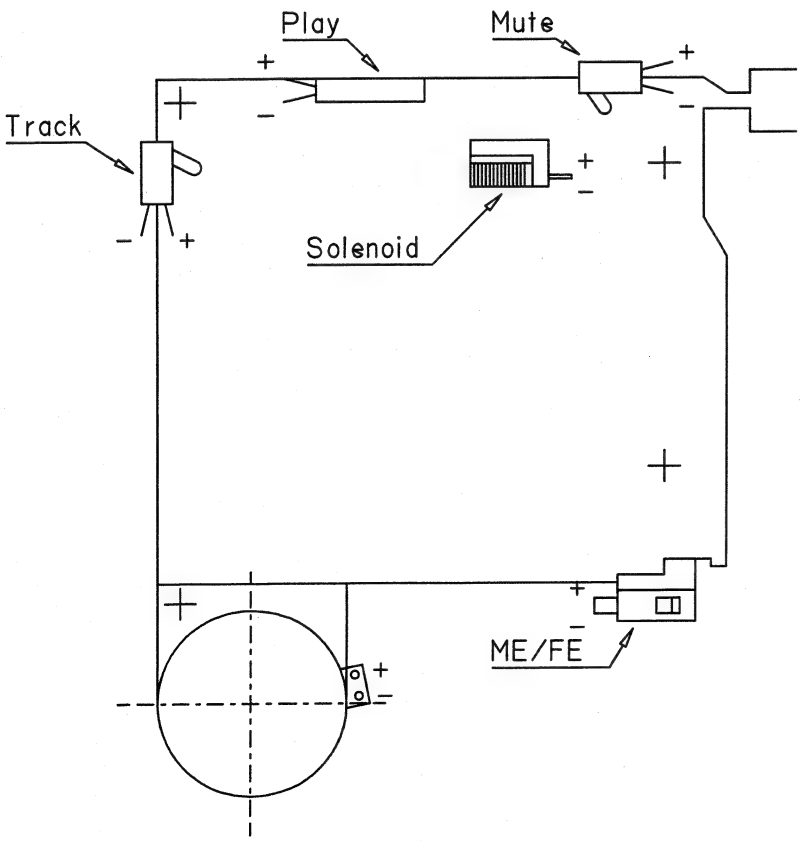

	colour	function
1	--	---
2	black	+Track Sw
3	red brown	COMMON
4	orange	+14V
5	yellow	Play Sw
6	green	Motor
7	blue	Mute SW
8	violet	+ Solenoid
9	grey	– Solenoid
10	white	– Me/Fe
11	black	+ Me/Fe

PCS 81 639

LCA 5.2 EXPLODED VIEW

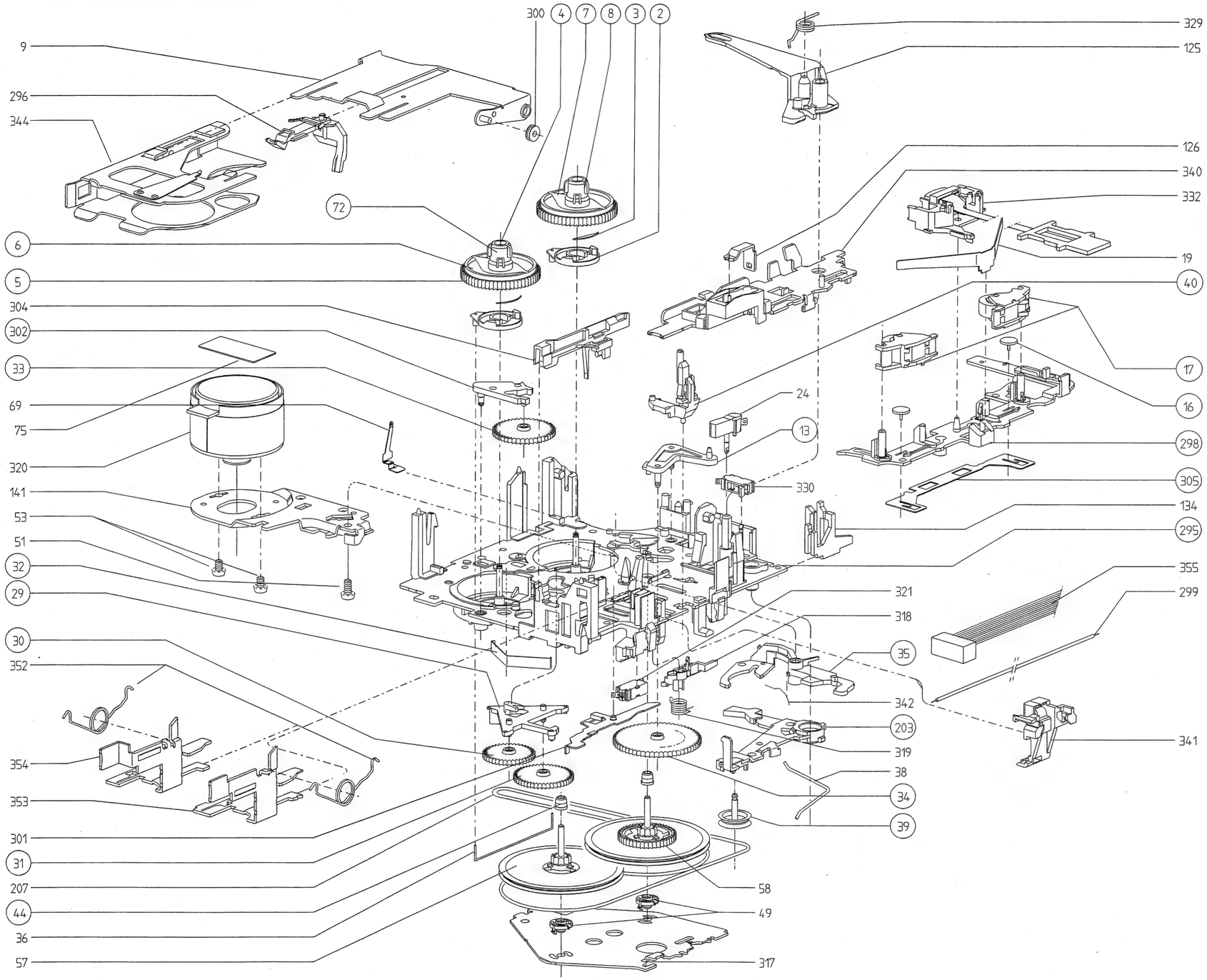

PCS 81 640

PARTS LIST LCA5.2

2/3	4822 466 70527	Disc assy
4/5/6/7/8	4822 466 70526	Coupling felt assy white
4/5/6/7/72	4822 528 10898	Coupling felt assy black
9	4822 466 81479	Cassette lift
16	4822 528 80983	Fixation
17	4822 403 40157	Pressure roller assy
24	4822 276 13081	Play switch
29/30/31	4822 522 20327	Gear assy
32	4822 492 71468	Leaf spring
35	4822 403 52031	Gear arm
36	4822 492 90076	Lever
39	4822 528 81144	Pulley
40	4822 403 10225	Holder
44	4822 520 30406	Bush bearing
49	4822 520 30407	Excentric
53	4822 502 12548	Special screw
57	4822 528 80985	Flywheel assy
58	4822 528 81517	Flywheel assy
125	4822 403 71287	Lever eject
126	4822 403 71286	Lever blocking
203	4822 404 21169	Arm
207	4822 358 31136	Driving belt
296	4822 256 92317	Holder cassette
298	4822 403 71282	Head support bracket
300	4822 528 10942	Lift roller
301	4822 466 10758	Plate logic
304	4822 462 30632	Band conductor
305	4822 466 10759	Control plate
318	4822 403 71284	Latch
319	4822 492 42774	Spring latch
320	4822 361 21764	Motor MSI-5 CCW
321	4822 276 13617	Switch mute
330	4822 276 13616	Switch track
332	4822 249 30227	Magnetic head
340	4822 402 10106	Push button rod
344	4822 256 10151	Cassette carrier assy
	4822 691 10466	Deck LCA5.2 complete

Lubrication greases/oils

4822 390 10107	Isoflex PDP 65, 30ML
4822 390 10133	Grease 585K
4822 390 10134	Grease L30TF
4822 390 20116	Grease 004, 100G CAN
4822 390 20128	Isoflex TOPAS L 30

LCA 5.4 EXPLODED VIEW

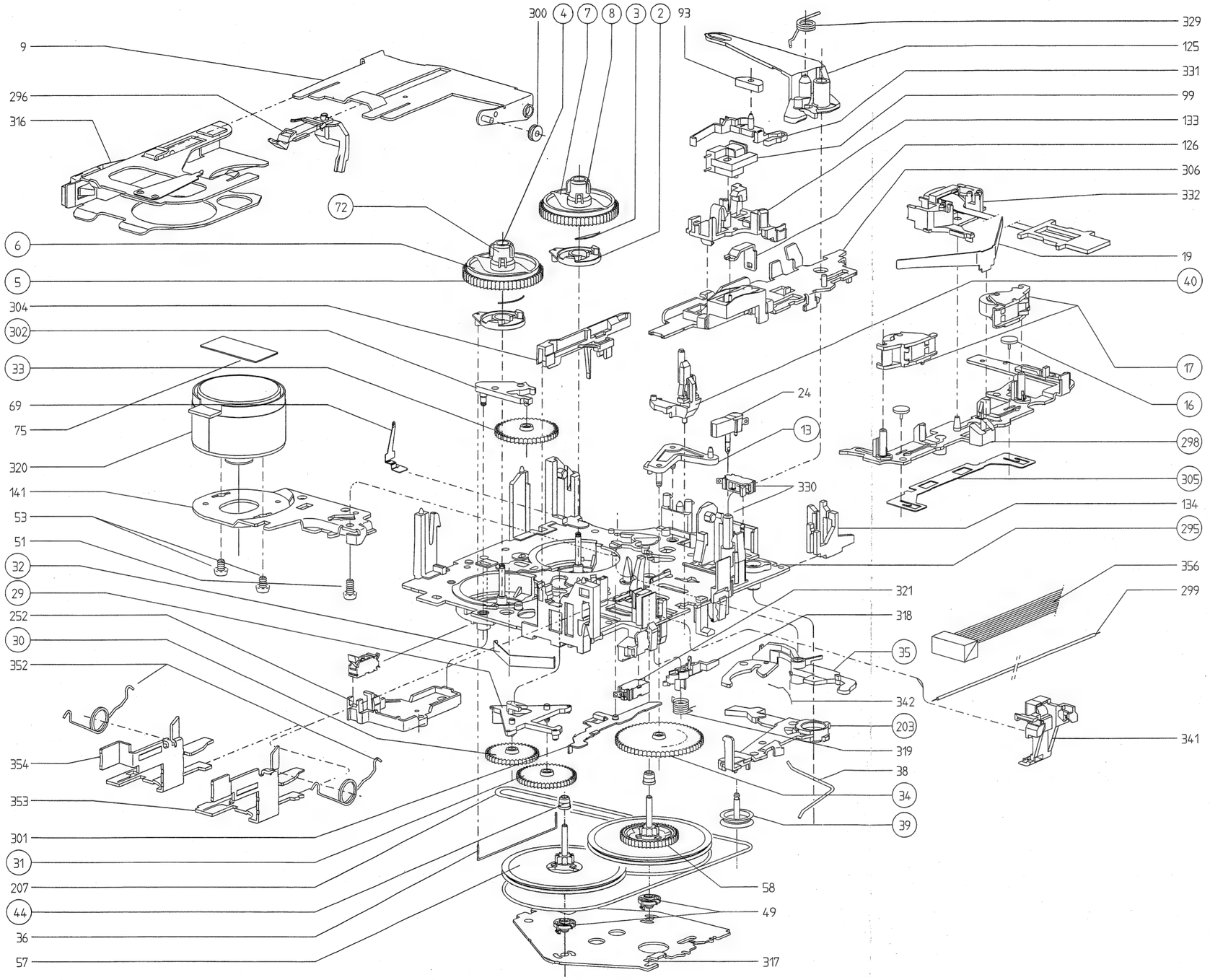

PARTS LIST LCA5.4

2/3	4822 466 70527	Disc assy
4/5/6/7/8	4822 466 70526	Coupling felt assy white
4/5/6/7/72	4822 528 10898	Coupling felt assy black
9	4822 466 81479	Cassette lift
16	4822 528 80983	Fixation
17	4822 403 40157	Pressure roller assy
24	4822 276 13081	Play switch
29/30/31	4822 522 20327	Gear assy
32	4822 492 71468	Leaf spring
35	4822 403 52031	Gear arm
36	4822 492 90076	Lever
39	4822 528 81144	Pulley
40	4822 403 10225	Holder
44	4822 520 30406	Bush bearing
49	4822 520 30407	Excentric
53	4822 502 12548	Special screw
57	4822 528 80985	Flywheel assy
58	4822 528 81517	Flywheel assy
93	4822 281 60165	Anchor plate
99	4822 281 50113	Solenoid magnet
125	4822 403 71287	Lever eject
126	4822 403 71286	Lever blocking
133	4822 466 83076	Plate solenoid II
203	4822 404 21169	Arm
207	4822 358 31136	Driving belt
296	4822 256 92317	Holder cassette
298	4822 403 71282	Head support bracket
300	4822 528 10942	Lift roller
301	4822 466 10758	Plate logic
304	4822 462 30632	Band conductor
305	4822 466 10759	Control plate
306	4822 403 71283	Push button rod
318	4822 403 71284	Latch
319	4822 492 42774	Spring latch
320	4822 361 21764	Motor MSI-5 CCW
321	4822 276 13617	Switch mute
330	4822 276 13616	Switch track/ME-FE
331	4822 403 71285	Lever solenoid
332	4822 249 30227	Magnetic head
344	4822 256 10151	Cassette carrier assy
	4822 691 10467	Deck LCA5.4 complete

Lubrication greases/oils

4822 390 10107	Isoflex PDP 65, 30ML
4822 390 10133	Grease 585K
4822 390 10134	Grease L30TF
4822 390 20116	Grease 004, 100G CAN
4822 390 20128	Isoflex TOPAS L 30

PCS 81 641

Car cassette deck LCA 2.4

PHIL-04728

Service
Service
Service

ERSATZTEILE
für Philips Car Systems
erhalten Sie bei:
KiVi Service GmbH
Windmühlenstr. 41 · 31178 Giesen/Emmerke
Tel.: 0 51 21 / 6 00 20 · Fax 0 51 21 / 60 02 54

Service Manual

12 V

TECHNICAL DATA

Operating voltage	: 9 - 16V (nom. 13.2V)
Tape speed	: 4.76cm/sec ± 0.5%
Wow & flutter	: ≤ 0.35% RMS (+10 - +45°C)
Crosstalk (track 2-3)	: < -40dB
Fast wind time	: ≤ 115secs (C-60)
Number of tracks	: 2x2
Channel separation (Tracks 1-2/3-4)	: > 35dB

Published by Philips Car Systems Printed in The Netherlands ©Copyright reserved Subject to modification 4822 725 23523

PCS 81 011

PHILIPS

4222

GENERAL

The LCA2.4 has the following features:

- Dolby
- "Key-Off" standby
- Automatic Music sensor System
- Metal / Ferro tape selector switch

MAINTENANCE

The cassette mechanism requires periodic cleaning, as well as periodic lubrication of the principal points.

1. Cleaning with alcohol or spirit

- Playback head (pos.332).
- Pressure rollers & capstans (pos.17, 57 and 58).
- Belt (pos.207) & pulley (pos.39).

To clean head, pressure roller and capstan, it is also possible to use drop-in cassette SBC114 (4822 389 20035).

2. Lubrication

Refer to the 'Lubrication Overview' on page 5.

ADJUSTMENTS AND CHECKS

Equipment required:
- Universal test cassette SBC419 (4822 397 30069)
- Universal test cassette SBC420 (4822 397 30071)
- Friction test cassette 811/CTM (4822 395 30054)
- Spring scale 50-500g (4822 395 80028)
- Puller for clutch (4822 395 60039)
- Wow & flutter meter
- AC millivoltmeters
- Spring scale 50-500 g

1. Pressure roller pressure

The pressure on the capstans should be 210 - 370 grammes (2.1 - 3.7N).
This pressure is measured as follows (NOR and REV):

- Select Play mode.
- Push the pressure roller back at the shown point by means of the spring scale.
- At the point where pressure roller and capstan just disengage the spring scale should be read.
- If the pressure is incorrect, replace spring 19.

2. Friction clutch (Reel assy)

- Insert friction test cassette 811/CTM (NOR and REV).
- Play take-up torque should be 35 - 75g/cm.
- Fast wind torque should be 40 - 150g/cm.
- If the torque is not correct, replace reel assy.

3. Wow & flutter/tape speed (Fig. G)

This check is carried out on a complete car radio; proceed as follows:
- Connect the wow & flutter meter to the LS outputs.
- Insert test cassette SBC419 (or SBC420) and play the 3150Hz signal.
- The wow & flutter value should be ≤ 0.35%.
- Tape speed should be 4.76cm/sec. ± 0.5%.
- The tape speed can be adjusted with screw "S".

In case of an excessive wow & flutter value, check following parts for correct functioning:
- motor 320
- pressure (pinch) rollers 17
- belt 207
- friction clutches (reel assy's)
- flywheels 57 and 58
- pulley 39

4. Azimuth (Figs. G, H)

This check is carried out on a complete car radio; proceed as follows:
- Apply a 4Ω load to both loudspeaker outputs.
- Connect an AC millivoltmeter across both loudspeaker outputs.
- Play the 10kHz signal of test cassette SBC419 or SBC420.
- Adjust screw 'A' for the average of the max. output voltages.
- The maximum allowed difference between both channels is 4 dB.
- Switch over to 'reverse play'.
- If the value measured differs from the previously measured value, bearing 49 in the front flywheel ("reverse") should be displaced.

5. Flywheels 57, 58

Refer to Fig. J.

BELT 207, FLY WHEELS 57 & 58, COG WHEEL ASSY 12,33

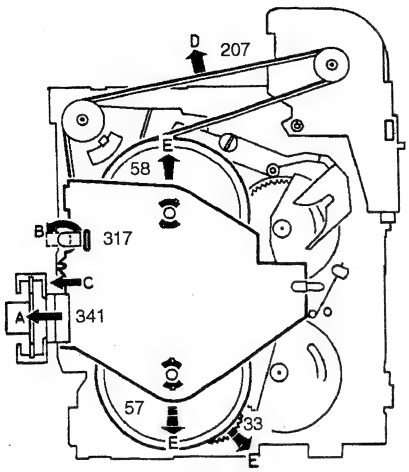

Fig. A

PRESSURE ROLLER 17, HEAD 332

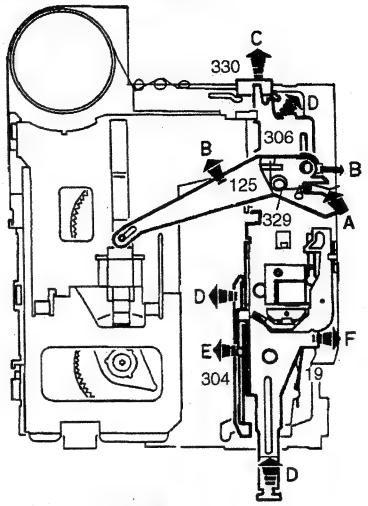

Fig. B

HEAD BRACKET 298

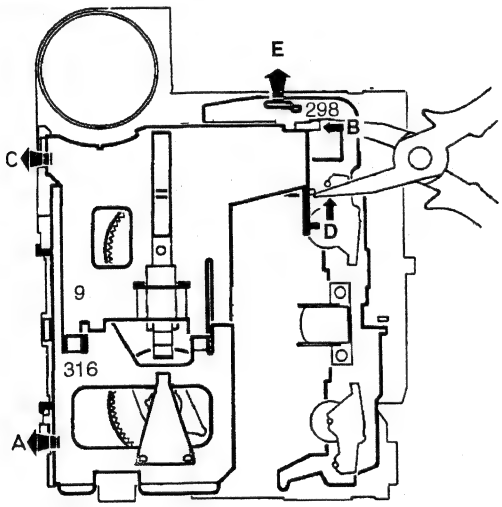

Fig. C

CLUTCH 6

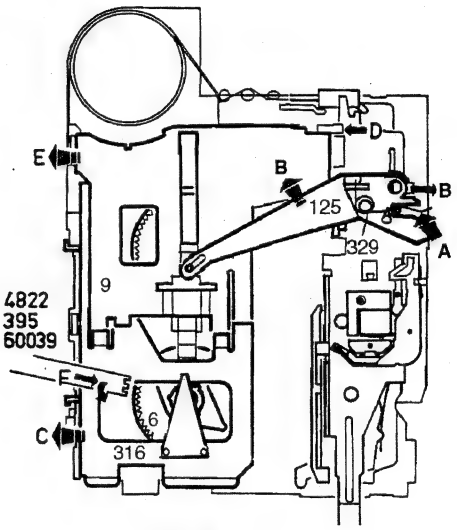

Fig. D

COG WHEELS 30, 31, 34

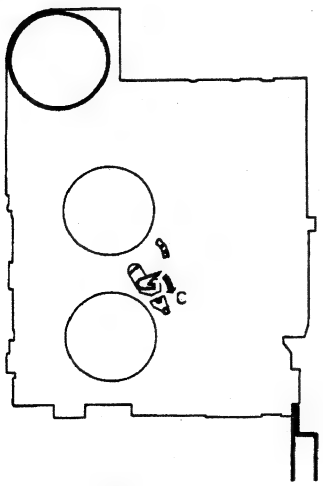

Fig. E

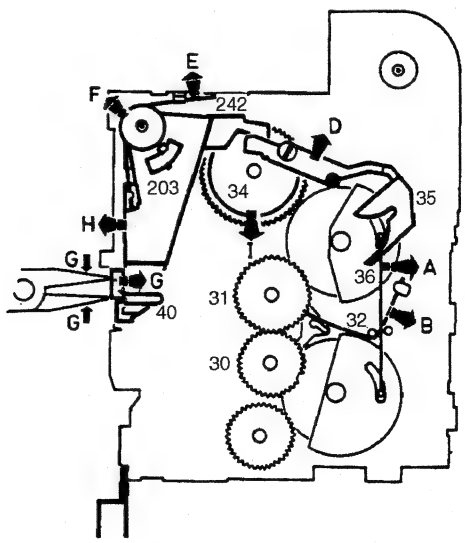

Fig. F

PCS 81 012

DISASSEMBLY INSTRUCTIONS

Notes:
In a few places parts are locked by synthetic bosses. To be able to dismantle these parts, the bosses have to be bent, displaced etc.
Gearwheels 33 and 34 and pressure rollers 17 are attached to the spindles by means of a snap connection. These parts can be disassembled carefully with a screwdriver.
If gearwheel 33 (or 34) has to be replaced, the corresponding bracket 12 (or 13) should ALSO be replaced.

Belt 207, Fly wheels 57 & 58, Cog wheel assy 12 & 33
See figure A.

Pressure roller 17, Head assy 332
See figure B.

Head bracket 298
See figure C.

Clutch 6
See figure D.

Cog wheels 30, 31, 34
See figure E.

Reel base assy
See figure F.

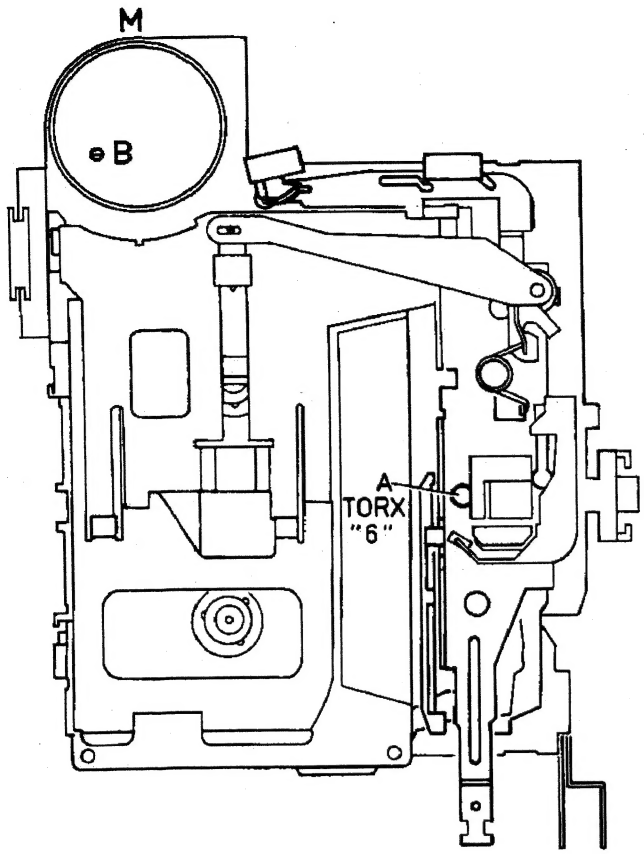

Fig. G

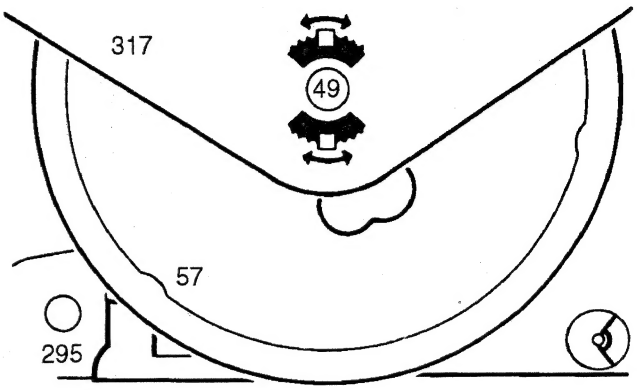

Fig. H

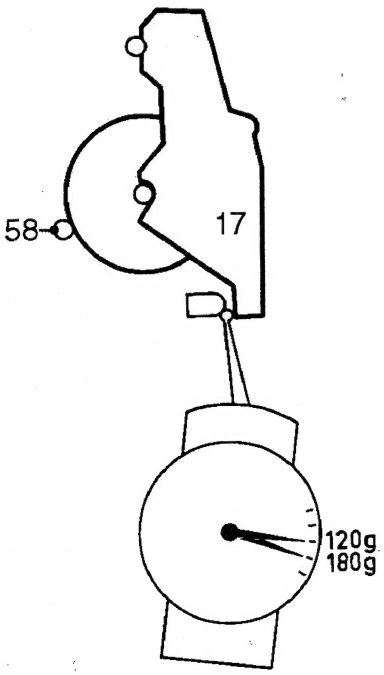

Fig. I

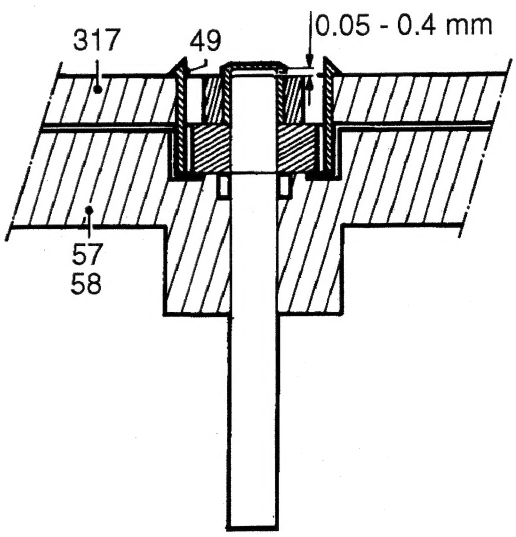

Fig. J

CONNECTIONS

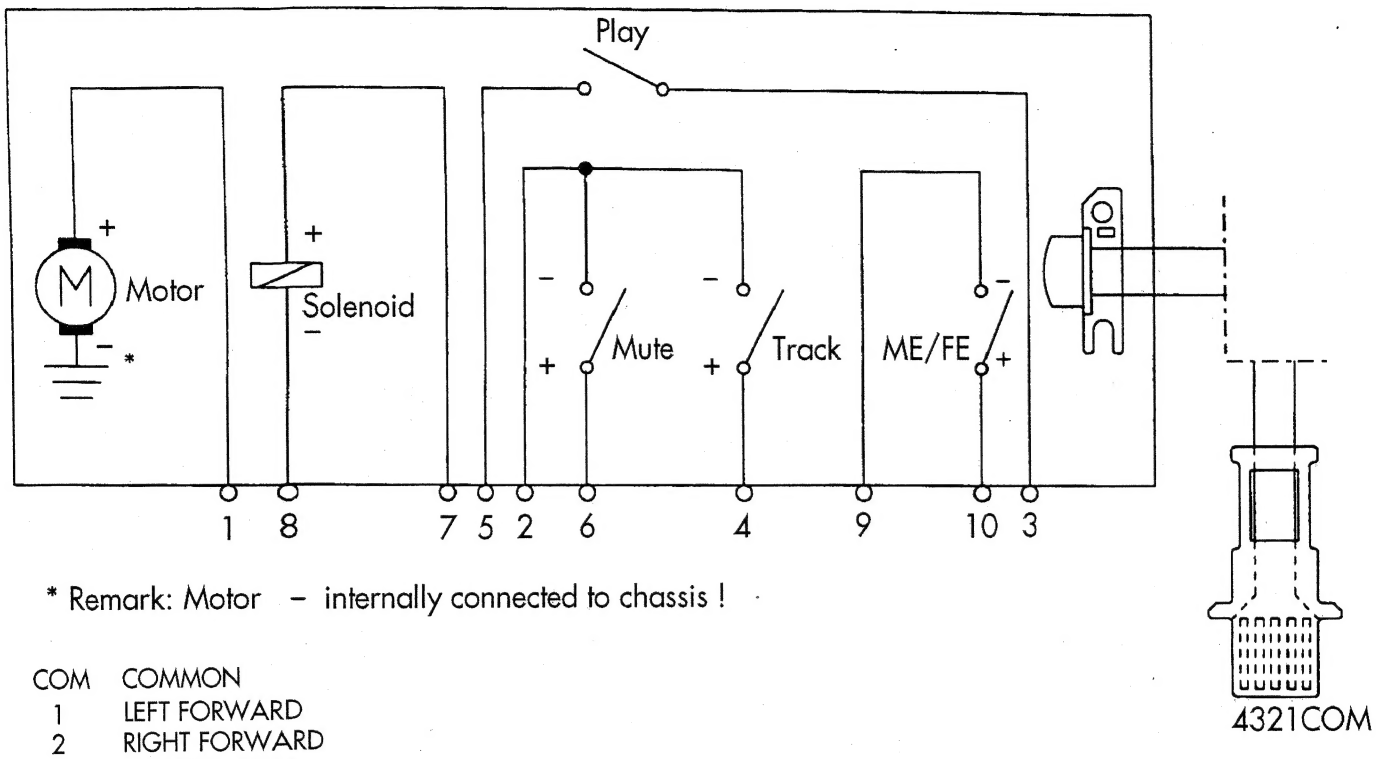

* Remark: Motor – internally connected to chassis !

COM	COMMON
1	LEFT FORWARD
2	RIGHT FORWARD
3	RIGHT REVERSE
4	LEFT REVERSE

Fig. K

Fig. N

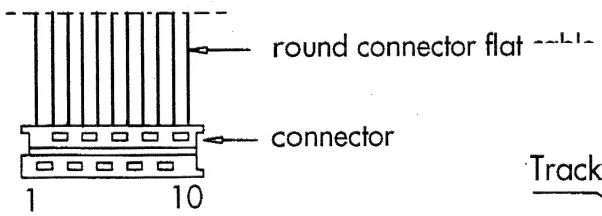

Fig. L

wire	colour	function
1	red	Motor+
2	brown	COMMON
3	orange	+14V
4	yellow	Track SW
5	green	Play SW
6	blue	Mute SW
7	violet	+ Solenoid
8	grey	– Solenoid
9	white	– ME/FE
10	black	+ ME/FE

Fig. O

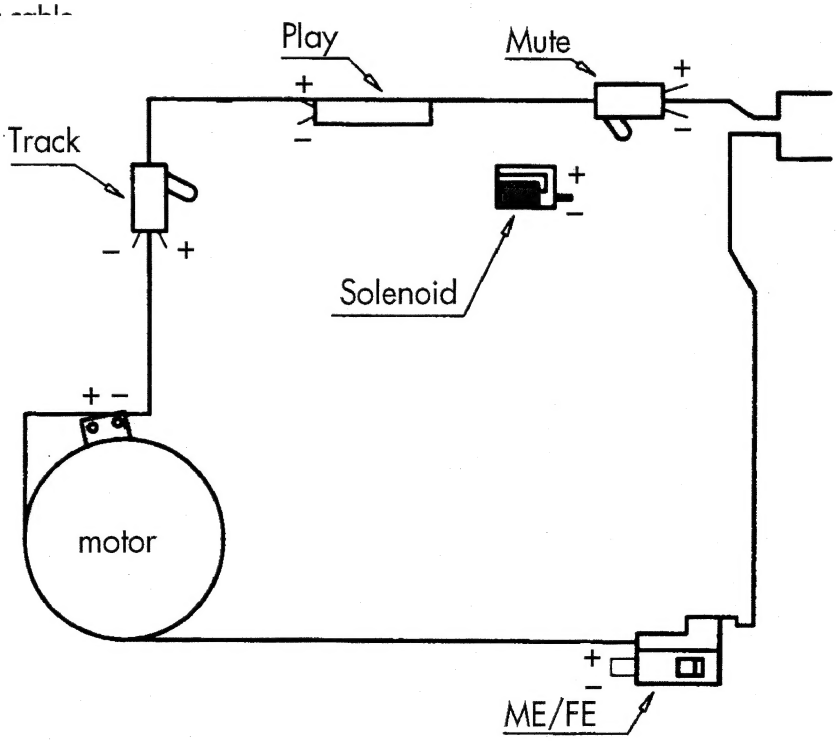

Fig. M

LUBRICATION OVERVIEW

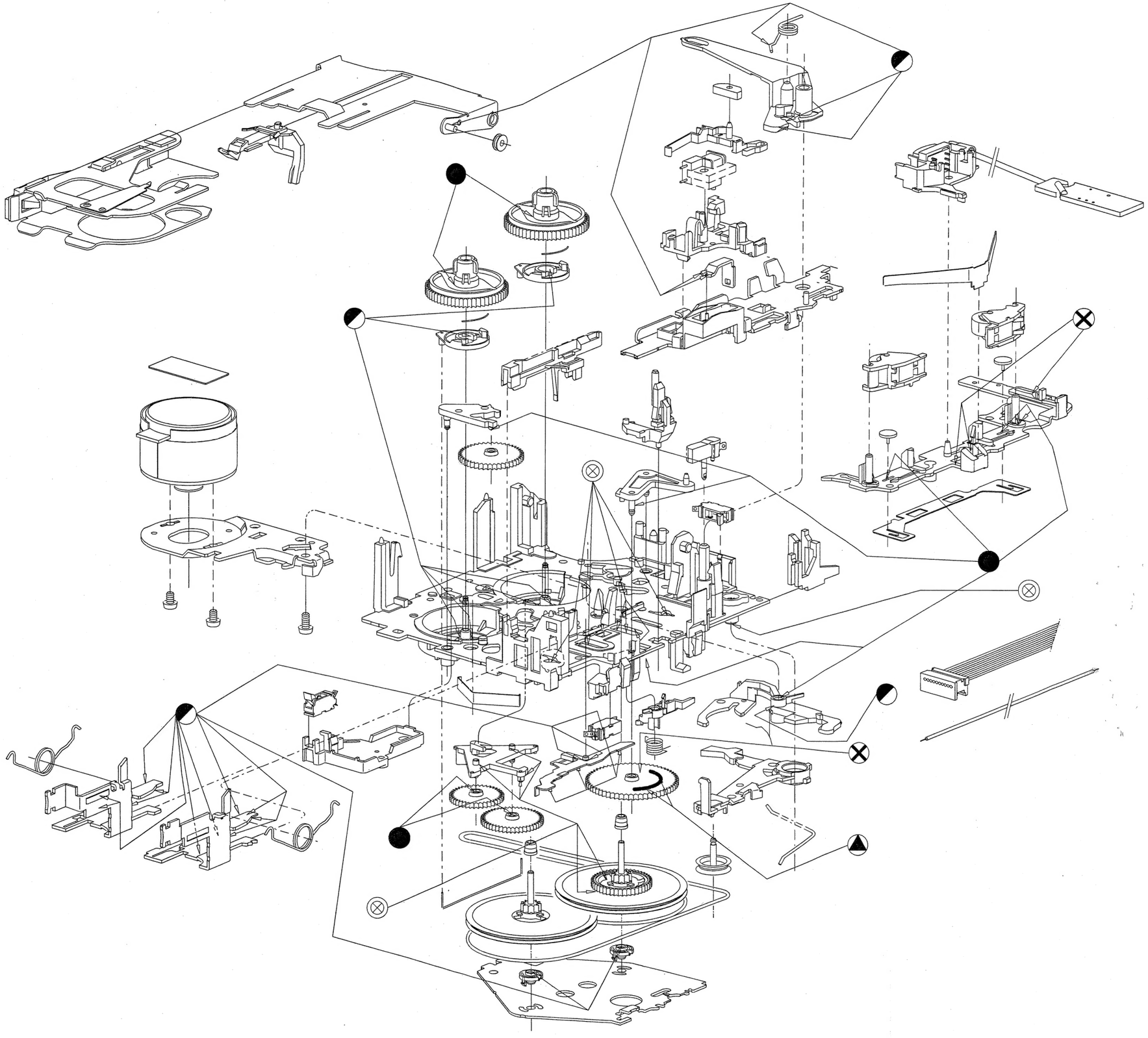

- Contact Oel PDP 65
- Grease Topas L30
- Grease SM 30 TF
- Grease Gleitmo 585 K
- Grease 4

EXPLODED VIEW

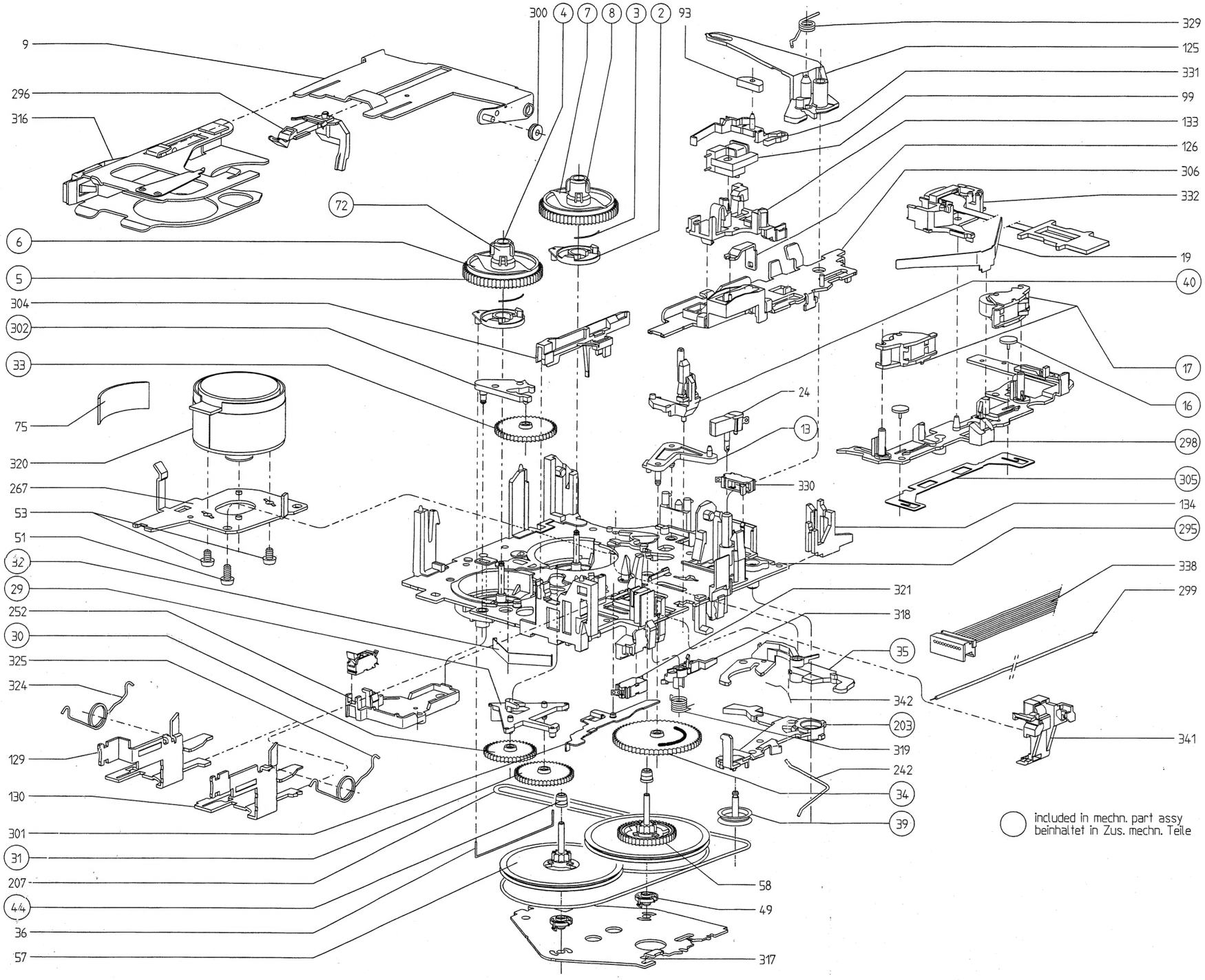

PARTS LISTS

2/3	4822 466 70527	Disc assy
4/5/6/7/8	4822 466 70526	Coupling felt assy white
4/5/6/7/72	4822 528 10898	Coupling felt assy black
9	4822 466 81479	Cassette lift
16	4822 528 80983	Fixation
17	4822 403 40157	Pressure roller assy
24	4822 276 13081	Play switch
29/30/31	4822 522 20327	Gear assy
32	4822 492 71468	Leaf spring
35	4822 403 52031	Gear arm
36	4822 492 90076	Lever
39	4822 528 81144	Pulley
40	4822 403 10225	Holder
44	4822 520 30406	Bush bearing
49	4822 520 30407	Excentric
53	4822 502 12548	Special screw
54/207	4822 358 30405	Driving belt
58	4822 528 81517	Fly wheel assy
93	4822 281 60165	Anchor plate
99	4822 281 50113	Solenoid magnet
125	4822 403 71287	Lever eject
126	4822 403 71286	Lever blocking
133	4822 466 83076	Plate solenoid II
203	4822 404 21169	Arm
296	4822 256 92317	Holder cassette
298	4822 403 71282	Head support bracket
304	4822 462 30632	Band conductor
306	4822 403 71283	Push button rod
318	4822 403 71284	Latch
319	4822 492 42774	Spring latch
320	4822 361 21764	Motor MSI-5 CCW
321	4822 276 13617	Switch mute
330	4822 276 13616	Switch track
331	4822 403 71285	Lever solenoid
332	4822 249 30227	Magnetic head
	4822 691 10438	Deck LCA2.4 complete

Lubrication greases/oils

4822 390 10107	Isoflex PDP 65, 30ML
4822 390 20128	Isoflex TOPAS L 30
4822 390 20116	Grease 004, 100G CAN
4822 390 20128	Isoflex TOPAS L 30